Coffee Table • Jewelry Box • Three-way Miters • Table Saw Outfeed Roller • Crosscutting Tips

Woodsmith®

Vol. 19 / No. 112

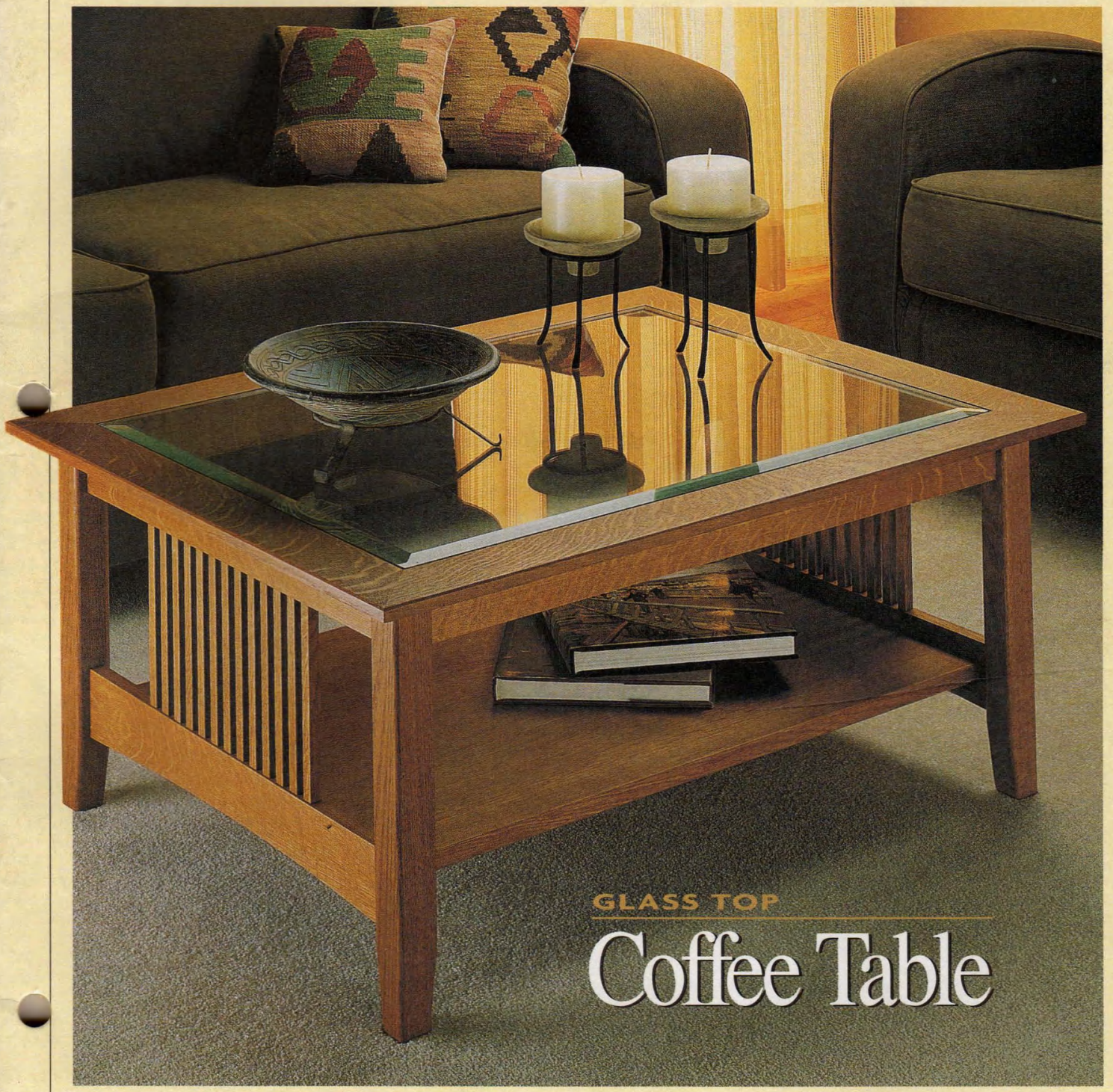

GLASS TOP

Coffee Table

Woodsmith

No. 112 August, 1997

Publisher Donald B. Peschke
Editor Terry J. Strohman
Associate Editors Jon Garbison, Vincent Ancona
Art Director Todd Lambirth
Senior Illustrators David Kreyling, Dirk Ver Steeg
Graphic Designer Mike Mittermeier

CREATIVE RESOURCES

Creative Director: Ted Kralicek • *Project Developer:* Ken Munkel • *Sr.Project Designer:* Kent Welsh • *Project Designers:* Ted Wong Jr., Kevin C. Boyle • *Shop Manager:* Steve Curtis • *Shop Craftsman:* Steve Johnson • *Photography Dir.:* Lark Smothermon • *Senior Photographer:* Crayola England

BOOKS

Executive Editor: Douglas L. Hicks • *Art Director:* Linda Vermie • *Senior Graphic Designer:* Chris Glowacki

CIRCULATION

Subscriber Services Director: Sandy Baum • *New Business Director:* Glenda K. Battles • *Renewal Manager:* Paige Rogers • *Billing Mgr.:* Rebecca Cunningham • *Assistant Subscription Mgr.:* Joy Krause • *Associate Graphic Design Director:* Susie Rider • *Sr. Graphic Designer:* Cheryl L. Simpson

CORPORATE SERVICES

Vice President of Planning and Finance: Jon Macarthy • *Controller:* Robin Hutchinson • *Sr. Account.:* Laura Thomas • *Accts. Payable:* Mary J. Schultz • *Production Dir.:* George Chmielarz • *Production Assistant:* Susan Dickman • *Electronic Pub:* Douglas M. Lidster • *Production Artist:* Jon Snyder • *Prepress Image Spec.:* Troy A. Clark • *New Media Manager:* Gordon C. Gaippe • *Web Site Art Director:* Gene Pederson • *Network Administator:* Al Barnes • *I.S. Support Assistant:* Chris Harrison • *Prof. Development Dir.:* Joyce Moore • *H.R. Assistant:* Kirsten Koele • *Admin. Assistant:* Julia Fish • *Receptionists:* Jeanne Johnson, Sheryl Ribbey • *Building Maint.:* Ken Griffith • *Special Projects Director.:* Saville H. Inman

WOODSMITH MAIL ORDER

Operations Director: Bob Baker • *Materials Mgr:* Mark Mattiussi • *Customer Service Mgr.:* Jennie Enos • *Warehouse Supr.:* Nancy Johnson • *Buyer:* Linda Jones • *Technical Service Rep.:* Matt TeRonde • *Oper. Assist.:* Tammy Aldini • *Team Leader:* Karla Eslinger • *Cust. Serv. Reps.:* Anna Cox, Margo Petrus, Tammy Truckenbrod, Nancy Downey, Adam Best, Deborah Rich • *Warehouse:* Chuck Carlson, Sylvia Carey, Larry Prine

WOODSMITH STORE

Manager: Dave Larson • *Assistant Manager:* Paul Schneider • *Sales Staff:* Pat Lowry, Jerome Herr, Wendell Stone, Jim Barnett, Kathy Smith, John Johnson • *Office Manager:* Vicki Edwards

Woodsmith® (ISSN 0164-4114) is published bimonthly (Feb., Apr., June, Aug., Oct., Dec.) by August Home Publishing Company, 2200 Grand, Des Moines, IA 50312.

Woodsmith® is a registered trademark of August Home Publishing.
Copyright© 1997 August Home Publishing Company. All rights reserved.

Subscriptions: Single copy: $4.99. One year subscription (6 issues), $24.95. (Canada/Foreign add $5 per year, U.S. funds.)
Periodicals Postage Paid at Des Moines, IA and at additional offices.
Postmaster: Send change of address to *Woodsmith*, Box 37112, Boone, IA 50037-2112.
Subscription Questions? Write to *Woodsmith*, P.O. Box 842, Des Moines IA 50304-9961 or call 1-800-333-5075, 8:00 am to 5:00 pm, Central Time, weekdays.
E-Mail: woodsmith@woodsmith.com
World Wide Web: http://www.woodsmith.com

Printed in U.S.A.

EDITOR'S COLUMN

SAWDUST

I had just gone down to the shop to see if the finish had dried on the jewelry box that's featured on page 14. As I opened the shop door, I noticed someone huddled over the project examining it closely.

When he turned around, I realized it was Don. (He's the founder and publisher of *Woodsmith.*) So I asked him what he thought of the jewelry box. At first, all he said was, "I want to build one of these!" But when I asked him why, he mentioned a couple of things.

The first thing he mentioned was it packed a lot of woodworking in a compact package.

TECHNIQUES. Well, it's true. This jewelry box does provide a perfect opportunity to try your hand at different woodworking techniques. To start with, the top and bottom panel of the box are veneered. And the corners of the box are joined together with splined miters.

But what really sets this project apart is the small strips of walnut that contrast with the mahogany panels. These pieces come together to form a corner that requires a special type of joint — a three-way miter.

Now, if a three-way miter sounds a bit complicated, don't worry. We've included an article beginning on page 20 that takes you through the process — one step at a time.

PRECISE FIT. Another thing that intrigued Don about this jewelry box was the precise fit of all the small pieces. And since a portion of the joinery is always exposed (whether the lid is open or closed), getting a perfect fit is especially important. To me, that's the most challenging (and satisfying) part of building a small project like this.

However, getting a perfect fit isn't as difficult as it sounds. The secret is simple enough — test pieces.

Now using test pieces isn't really anything new. We do it all the time. But since the box is fairly small, you have the luxury of being able to make as many test pieces as you need until you're satisfied with the fit. And that's just what we did. We used test pieces for everything from fitting the three-way miters to installing the lid hardware.

HUMIDOR. Finally, if you prefer fine cigars to fine jewelry, we've included plans for converting the jewelry box into a cigar humidor. For more on how to do this, refer to page 19.

HELP WANTED. We're looking for a full-time art director to help develop and produce our woodworking books. Ideally, this person should have considerable graphic design experience with special concern for details. Also, "how-to" book publishing experience would be a plus.

If you're interested, send a cover letter and resume to B.A. Moore, August Home Publishing, 2200 Grand Ave., Des Moines, IA 50312.

Terry

A LOOK INSIDE

CONTENTS

Features

Coffee Table 6

This coffee table features a beveled-glass top and traditional mortise and tenon joinery. And we've come up with a quick way of making the mortises for the spindles on the ends of the table.

Jewelry Box 14

Veneered mahogany panels and applied walnut edging are just a couple of the woodworking techniques you'll have a chance to use when building this jewelry box.

Humidor 19

With only a few minor modifications, the jewelry box can be built as a classic cigar humidor. All it takes is some Spanish cedar and a few pieces of specialty hardware.

Three-way Miters 20

Despite their appearance, three-way miters aren't all that difficult. Our step-by-step technique article takes you through the process from start to finish — without cutting any corners.

Crosscutting Tips 24

There's more to accurate crosscutting on the table saw than just pushing a board past a blade. Here we share some of our favorite tips that we've come across over the years.

Table Saw Outfeed Roller 28

This adjustable outfeed roller attaches directly to the wings of the table saw. So you won't have to jockey it around the shop every time you move your saw.

Departments

Tips & Techniques 4
Shop Notes 22
Reader's Jig 32
Talking Shop 34
Sources 35

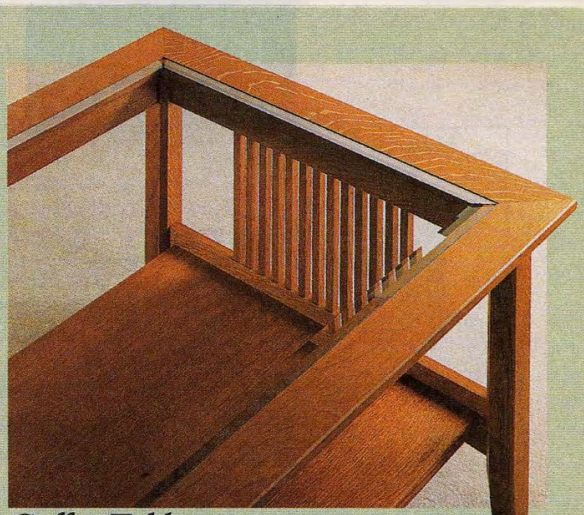

Coffee Table *page 6*

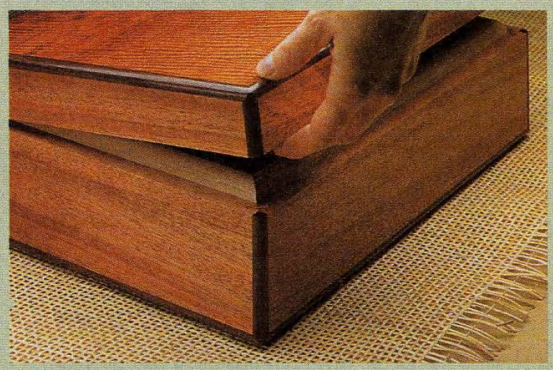

Jewelry Box *page 14*

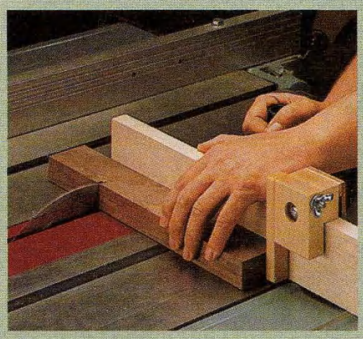

Crosscutting Tips *page 24*

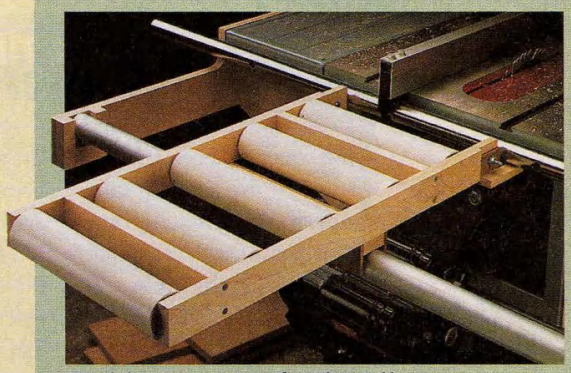

Table Saw Outfeed Roller *page 28*

TIPS & TECHNIQUES

Miter Saw Workstation

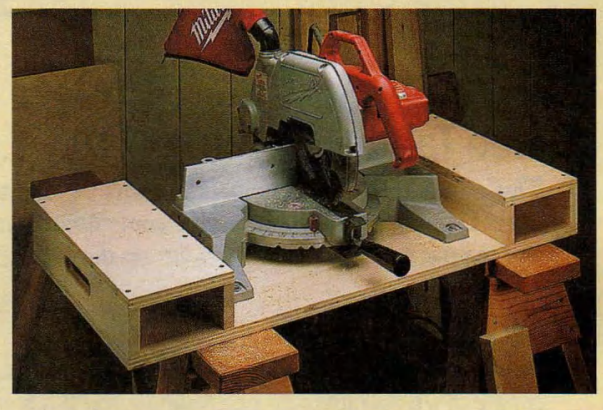

I like my power miter saw for its portability — I use it for everything from trimming molding for furniture projects to cutting 2x4s.

But I've never been happy with the small table of the saw. It doesn't provide much support for cutting longer pieces. So I built a portable workstation for the saw that doubles as an extension table, see photo.

To make the workstation, I started with a plywood base. I sized the base to fit the depth of my saw, but I made it about 16" longer than the width of the saw. (This extra length provides space for the extensions.)

The extensions are just U-shaped channels that get screwed down to the base to form a "box" on each side of the saw.

The tops of the extensions are made of 3/4"-thick plywood, while the sides are solid hardwood, see detail 'a' below.

To determine the width of the side pieces, measure the height of the table on your miter saw. Then subtract the thickness of the plywood you're using for the tops. When the extensions are added to the base, the tops should be flush with the table of the saw.

Before screwing all the pieces together, I made a couple hand cut-outs to lift the saw, see detail 'b'. With my saw screwed down to the base, I can carry the whole unit from job to job.

Rod Swaffer
Plano, Texas

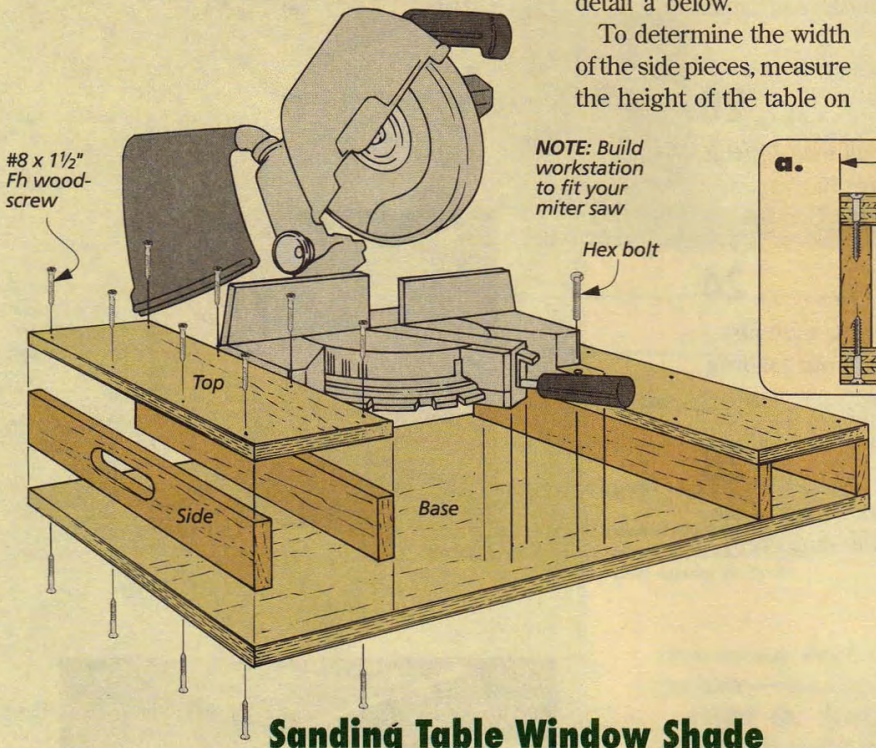

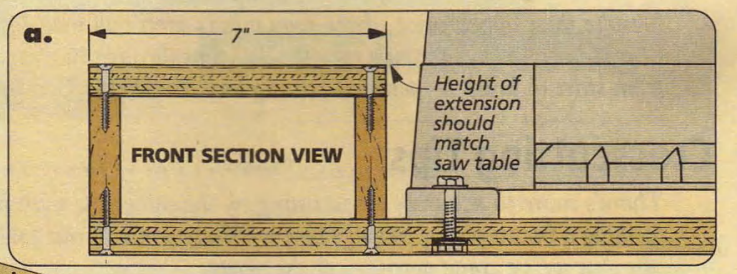

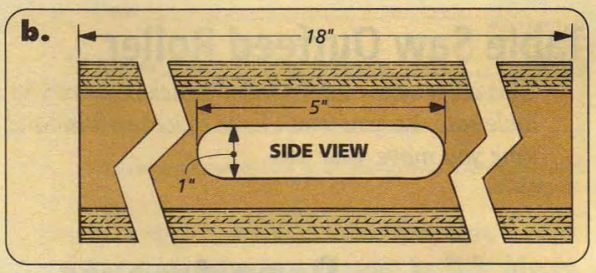

Sanding Table Window Shade

I've found that when sanding smaller pieces, the vacuum on my sanding table doesn't create enough suction to pull the dust through the holes in the table.

To solve this problem, I mounted a retracting window shade to one end of my sanding table, see Fig. 1.

Pulling the shade over the part of the table I'm not using reduces the surface area and increases suction.

The suction from the table holds the shade in place. When I'm finished, I just retract the shade.

Doug Weinthaler
Rochester, New York

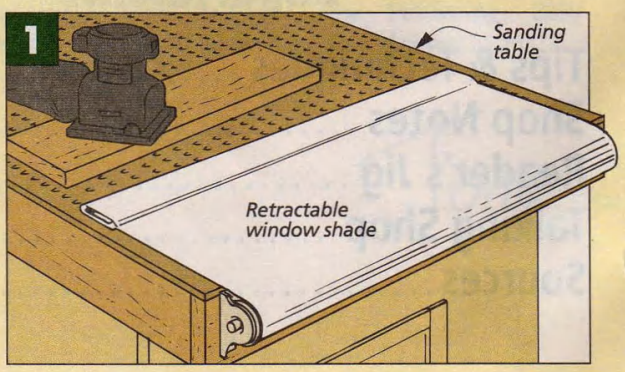

Belt Sander Fence Extension

When sanding the edge of a wide workpiece on my stationary belt sander, too often I wind up with an edge that's either rounded or out of square.

To keep the stock square to the sanding belt, I attached a fence to the side of my sander. It's just an L-shaped piece of plywood that's screwed to a couple of support arms, see Fig. 1.

To attach the fence to my belt sander, I drilled and tapped some holes on the back side of the sander and then bolted the arms in place. Note: You may have to use shims to position the fence at a 90° angle to the sanding belt.

Now to get a square edge, I just hold my workpiece against the fence as I run it over the sander.

Bob Kelland
St. John's, Newfoundland

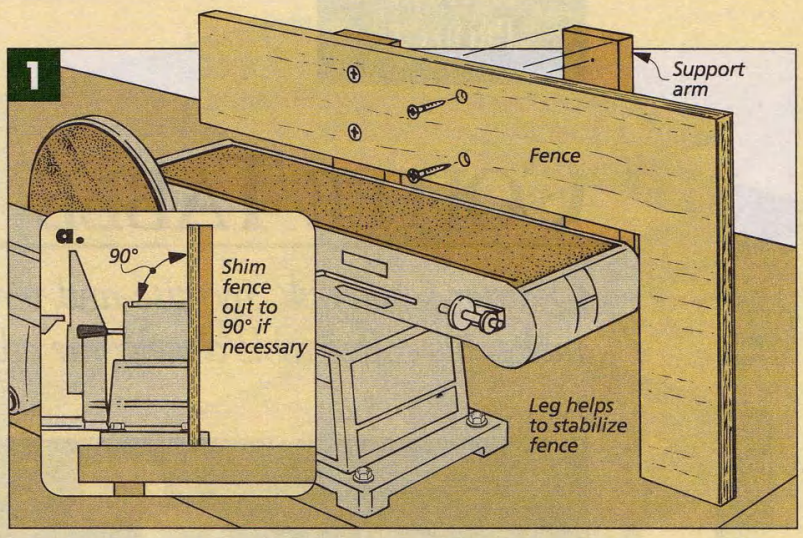

Pop-Up Lid

I recently made a tool box with a shallow, hinged lid that is held closed with snap catches. But because there isn't any lip on the lid, I have a hard time getting my fingers underneath the lid to open it.

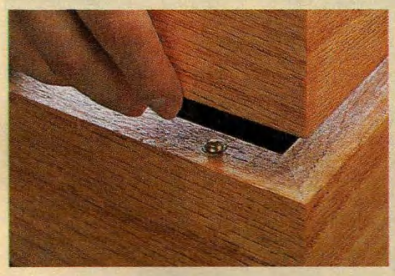

So to make it easier to lift the lid after undoing the catches, I installed a couple of spring-loaded bullet catches on the front edge of the box. I drilled a hole with a shallow counterbore for each catch so the lip of the catch would sit flush, see Fig. 1.

The catches pop the lid of the box up about an 1/8" or so — just enough the get my finger tips under the lid to lift it up.

Fred Shoulders
Ajo, Arizona

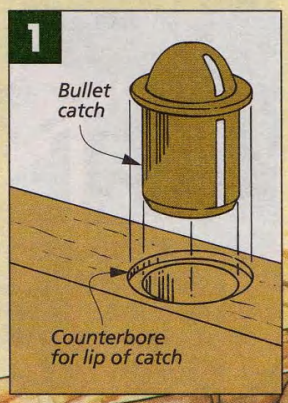

Stubby Screwdriver

Recently, I needed to drive a screw in a small compartment of a project I was making. I couldn't find a stubby screwdriver that would fit, so I made my own.

I just drilled a shallow hole in the end of a short section of dowel. Then I epoxied a power driver bit into the hole, see detail 'a'.

James Brookes
St. Ann, Missouri

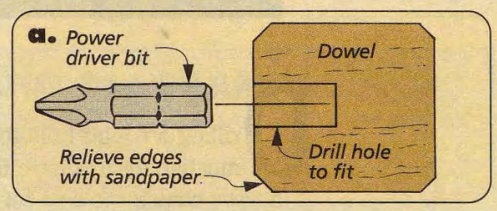

QUICK TIPS

DOUBLE BRUSHES

Trying to brush a finish on dowels can be a real chore. Not only is it time consuming, but it's easy to miss a spot, too.

To make the job go a bit quicker, I taped a couple foam brushes together, see photo.

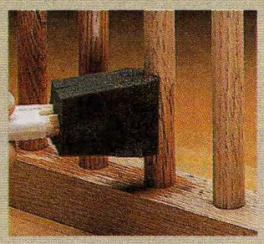

Now all I have to do is run the brushes down one side of the dowel and then the other, and I'm done.

William Robidoux, Jr.
Tiverton, Rhode Island

CONTACT CEMENT

I use contact cement on a regular basis in my shop. But instead of using a new brush every time I need to apply some adhesive, I put my brush in an empty can when I'm finished.

Then before putting the lid on the can, I pour in a small amount of contact cement. The fumes from the contact cement keep the brush from drying out. This way, I can use the brush over and over before having to throw it out.

Edgar Morrison
Hot Springs, Arkansas

SUBMIT YOUR TIPS

If you would like to share an *original* shop-tested tip, send it to: *Woodsmith*, Tips and Techniques, 2200 Grand Avenue, Des Moines, Iowa 50312. Or if it's easier, FAX it to us at: 515–282–6741. Or use our E-Mail: woodsmith@woodsmith.com

If published, you'll receive $30 to $150, depending on the published length. Include a brief explanation and sketch or photo. And don't worry, we'll rewrite the tip and redraw the art, if necessary. Also, *please* include a daytime phone number.

FEATURE PROJECT

COFFEE TABLE

Quarter-sawn oak, mortise-and-tenon joinery, and a beveled glass top make this coffee table a welcome addition to any home.

Drilling a round hole to create a mortise for a square tenon has always struck me as a bit odd. But aside from investing in an expensive machine for making mortises, the only solution I could come up with in the past was to round the tenon or square up the mortise with a chisel.

Now, if you're only talking about a few mortises, that's not a big deal. In fact, it's kind of relaxing. But when it came to the spindles on the ends of this coffee table (see photo), that's a little different story.

There are twenty-six spindles in the table, which means a total of fifty-two mortises to drill and square up. Instead of a quiet hour or two, you could spend the better part of a day on this part of the project alone.

Fortunately, we came up with a different procedure to make the mortises both quickly and accurately. (I'll give you a hint — it doesn't involve using a drill press *or* a chisel, refer to detail 'a' on page 7.)

GLASS TOP. But the mortises aren't the only feature of this table worth mentioning. The beveled glass top is also a little out of the ordinary.

Now at first, I was worried that the beveled glass would look too "modern" for this style of table. But actually, it complements the style by giving you a clear view of the spindles from just about any angle.

However, if you prefer the look of a solid wood top, we've included that as an option, see the box on page 13.

SOFA TABLE. One more thing. If this table looks slightly familiar, you have a good memory. It matches the sofa table that we built back in issue 104, (that's it in the background of the photo.) Both are made out of quarter-sawn white oak and have the same spindle design on the end frames.

(If you would like to build the matching sofa table but don't have a copy of issue 104, you can still order one, see Sources on page 35.)

Construction Details

OVERALL DIMENSIONS:
30"W x 38"L x 17"H

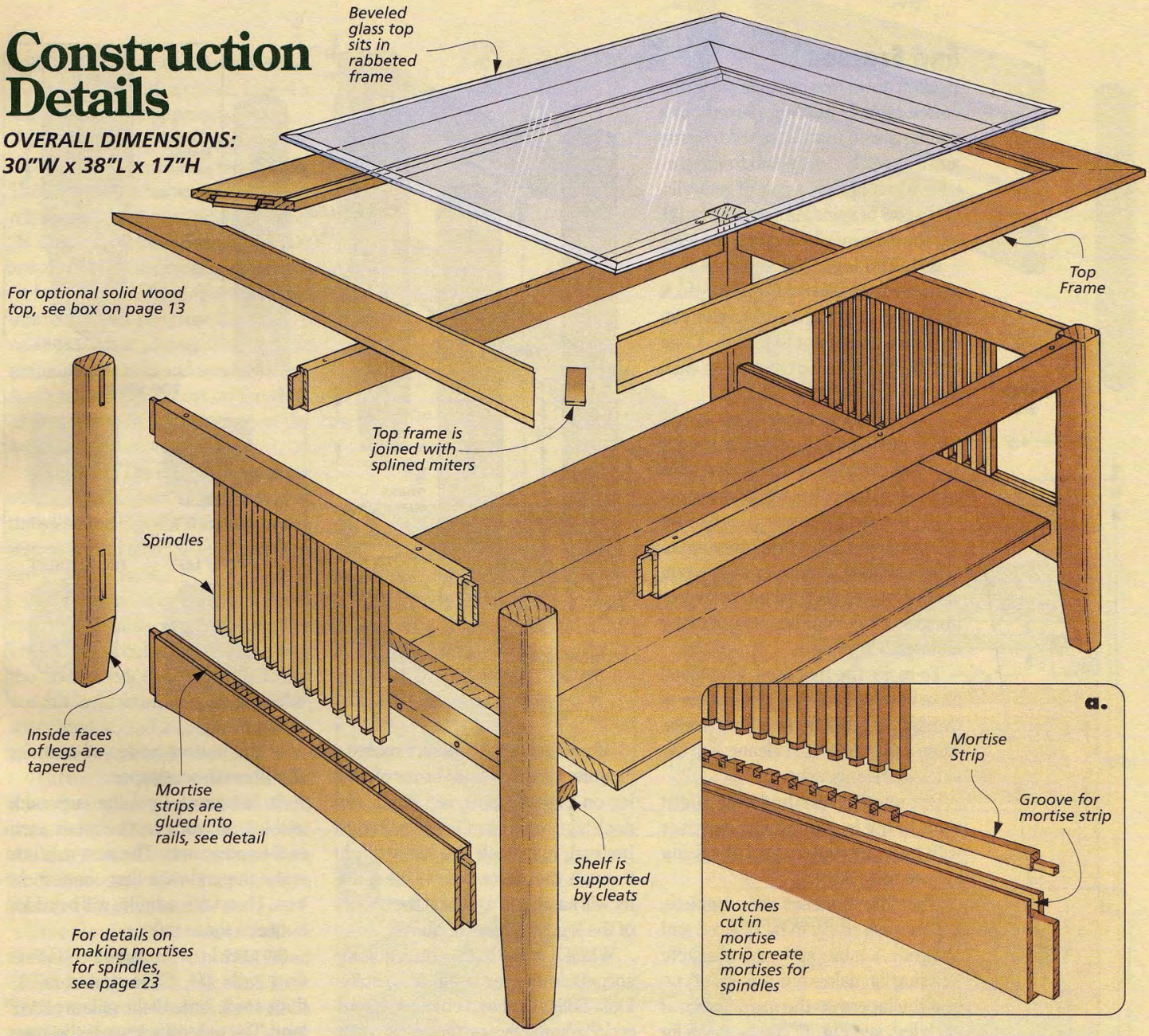

MATERIALS

A	Legs (4)	1¾ x 1¾ - 16¼
B	Upper End Rails (2)	¾ x 2 - 24½
C	Lower End Rails (2)	¾ x 3 - 24½
D	Mortise Strips (4)	½ x ⅜ - 24½
E	Spindles (26)	½ x ½ - 8¼
F	Cleats (2)	¾ x 1½ - 17
G	Stretchers (2)	¾ x 2 - 32½
H	Shelf (1)	¾ x 22 - 32
I	Frame Fr./Bk (2)	¾ x 3½ - 38
J	Frame Sides (2)	¾ x 3½ - 30

SUPPLIES

- (1) Beveled Glass ¼ - 24 x 32
- (6) #8 x 1¼" Fh woodscrews
- (18) #8 x 2" Fh woodscrews

CUTTING DIAGRAM

1¾" x 4" - 48" Quartersawn White Oak (2.7 Bd. Ft.)

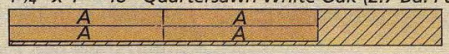

¾" x 5½" - 84" Quartersawn White Oak (3.21 Bd. Ft.)

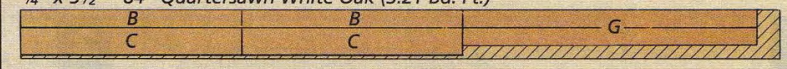

½" x 3½" - 72" Quartersawn White Oak (1.75 Sq. Ft.)

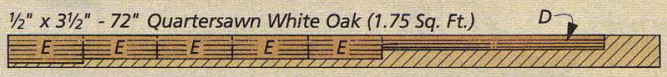

¾" x 5" - 60" Quartersawn White Oak (2.08 Bd. Ft.)

¾" x 5" - 72" Quartersawn White Oak (2 Boards @ 2.50 Bd. Ft. each)

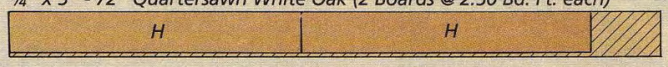

¾" x 4" - 84" Quartersawn White Oak (2.33 Bd. Ft.)

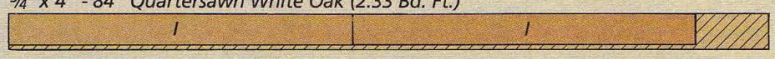

¾" x 4" - 72" Quartersawn White Oak (2.0 Bd. Ft.)

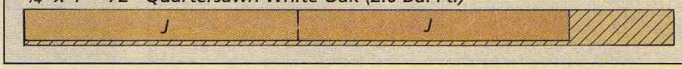

End Frames

Broken down into its basic parts, the coffee table is nothing more than a couple of end frames joined by a top and a shelf. And each end frame contains a pair of legs, a pair of end rails, and a row of spindles. I started building these frames by making the legs.

LEGS. The **legs (A)** begin as four squared-up blanks cut from 1¾"-thick stock, see drawing at right. After cutting the leg blanks to length, I laid out the mortises for the rails on each leg, see drawing and detail 'a'.

You can't go wrong laying out the two mortises at the top of each leg — they're on adjacent faces. But when laying out the single lower mortise on each leg, pay close attention to the orientation of the legs. The right and left legs of each frame are mirror images of one another, see drawing and detail 'a' at right.

To make the mortises, I removed most of the waste by drilling a row of overlapping holes on a drill press. Then using a chisel, I cleaned up the sides of the mortises.

But another method you might want to try is routing the mortises with a plunge router and a mortising jig, see page 32.

Once the mortises are complete, the legs are ready to be tapered and shaped. A table saw and a simple tapering jig makes quick work of cutting the tapers on the inside faces of each leg, see Fig. 1. The tapering jig I used is nothing more than a piece of plywood with a hardwood cleat attached to one end, see drawing in margin at left.

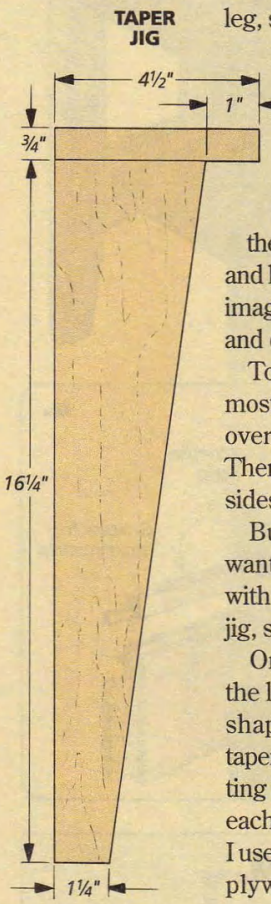

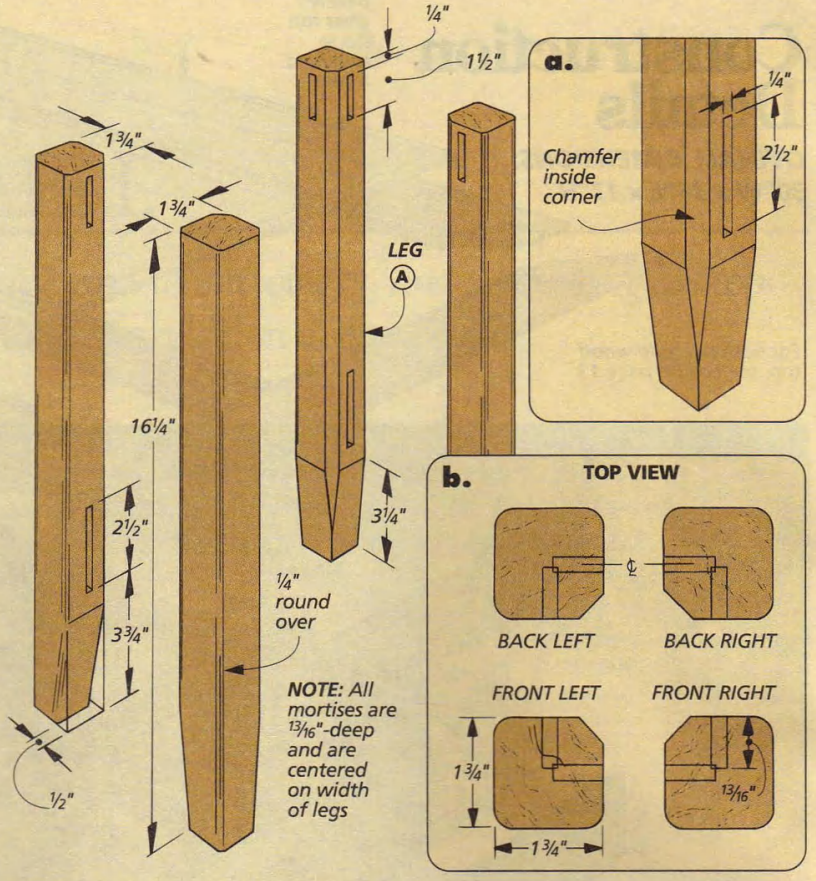

After cutting the tapers, I routed a chamfer on the inside corner of each leg on a router table, see Fig. 2. But don't try to chamfer the tapered edge. Instead, just push the leg straight through the router table — the chamfer will narrow to a point at the bottom of the leg, see detail 'a' above.

When it came to the three outside corners of the leg, I wanted a softer look. So instead of a chamfer, I routed ¼" roundovers on the edges, again using the router table, see drawing.

Finally, to prevent the legs from splintering in the event the table is dragged across the floor, I rounded over the bottom edges of each leg slightly with sandpaper.

At this point, I put the legs aside and began work on the other parts of the end frames. The next step is to make the end rails that connect the legs. Then later, spindles will be added between these rails.

END RAILS. I cut the **upper** and **lower end rails (B, C)** to size from ¾"-thick stock first. All the rails are 24½" long. The only difference is the lower rails are an inch wider than the upper rails, see drawing at top of page 9.

The next step is to make the mortises for the spindles. But instead of

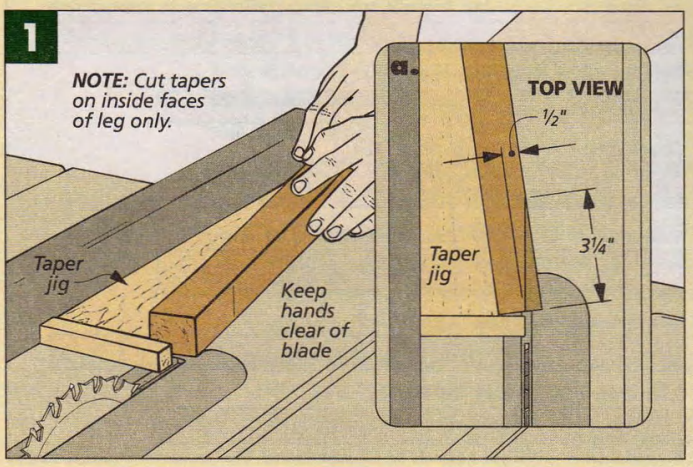

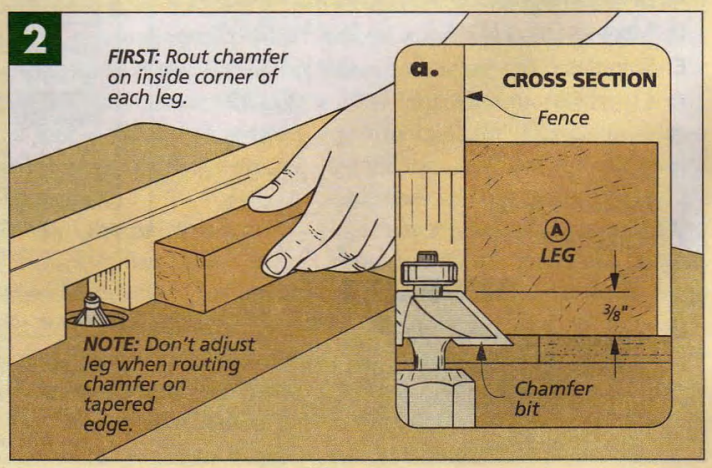

drilling a hole for each mortise and squaring it up with a chisel, I used a slightly different approach.

MORTISE STRIPS. First I cut a groove on one edge of each rail, see Fig. 3a. Then I glued in a narrow strip of wood with a row of notches, see Figs. 3 and 3b. Once these **mortise strips (D)** are glued into the grooves, the notches become mortises. For more on this technique, see page 23.

TENONS. After gluing the mortise strips into the rails and sanding them flush, tenons can be cut on the ends of the rails to fit the mortises in the legs, see Figs. 4, 4a, and 4b.

Shop Note: The ends of the mortise strips become part of the tenons of the rails, see Fig. 4b. This is why the tenons are cut *after* the mortise strips are glued in place.

ARCS. Now there are only a couple of steps left to finish up the rails. On the lower rails, I cut a gentle arc along the bottom edge, see Fig. 5. To lay out this arc, I used a pencil, a flexible straightedge, and a couple of blocks of wood, see photo below.

I cut the arcs on the lower rails with a band saw and then sanded them smooth with a drum sander. But you could also use a sabre saw and then sand them smooth by hand using a rounded sanding block.

To complete the upper rails, I drilled a couple of counterbored shank holes in each rail, see Fig. 5. These are for the screws that will be used to fasten the top later. The shank holes are slightly oversize (3/16"-dia.) to allow room for wood movement (especially if you're planning to build the solid wood top).

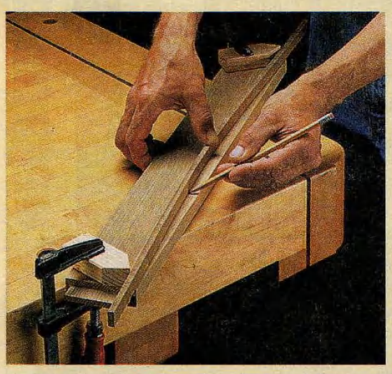

▲ *To flex the straightedge and lay out the arcs, clamp a couple of pointed scraps to the ends of the rails.*

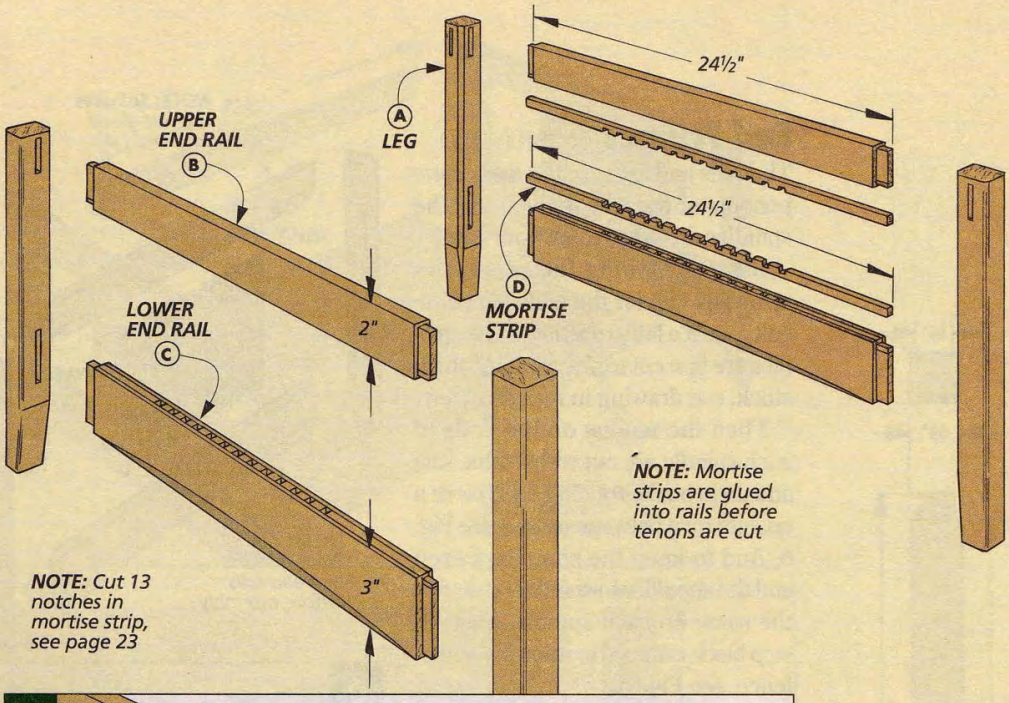

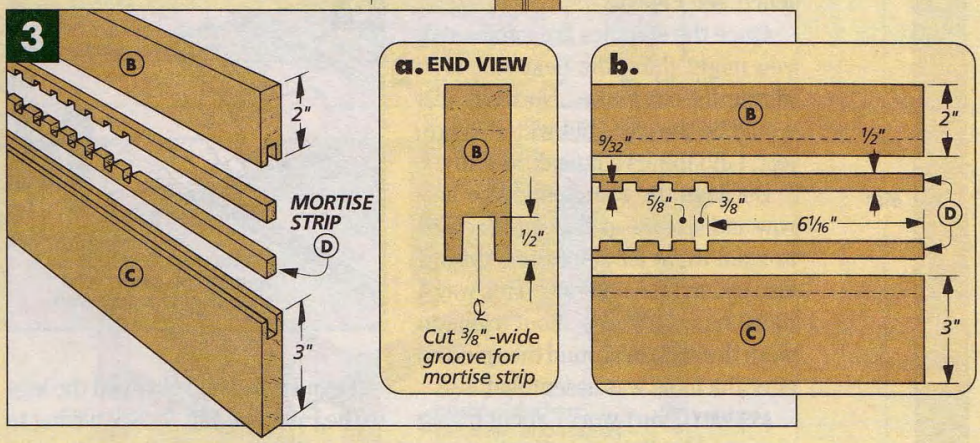

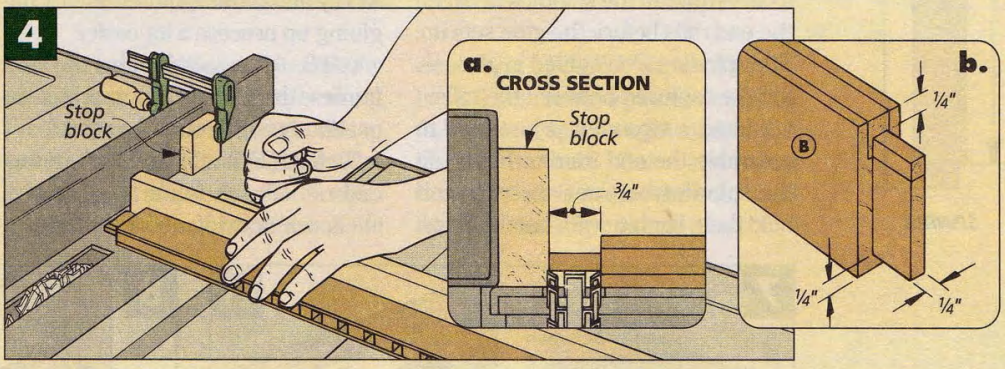

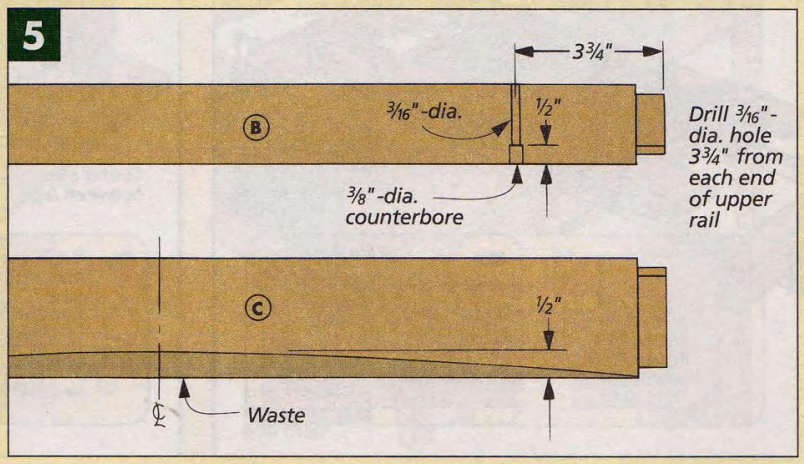

End Frames CONTINUED

The rails and legs are the main components of the end frames. But the spindles are what catch your eye.

SPINDLES. Making the twenty-six **spindles (E)** for the table isn't difficult — just a little repetitive. The spindles are first cut to size from 1/2"-thick stock, see drawing in margin at left.

Then the tenons on the ends of each spindle are cut with a table saw and dado blade, rotating each piece a quarter turn between passes, see Fig. 6. And to keep the shoulders even and the shoulder-to-shoulder distance the same on each spindle, I used a stop block clamped to my miter gauge fence, see Fig 6a.

Once the spindles are completed, you might think the next step is to glue up the end frames. Normally, this would be the case, but with this project, I did things a little differently.

Because the spindles are so narrow and spaced so closely, I decided to stain them all before assembly. I also stained the end rails. This way, I didn't have to worry about trying to work the stain in around the spindles after the table was assembled.

ASSEMBLY. Don't worry about trying to assemble all the spindles between the end rails before the glue sets up. The spindles aren't glued in place — they're captured between the rails.

I used a two-step procedure to assemble the end frames. First, I fit the spindles between the rails and held them in place with band clamps.

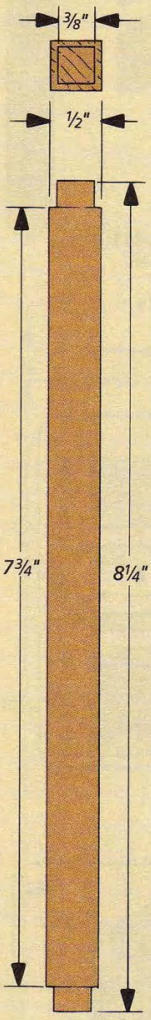

SPINDLE

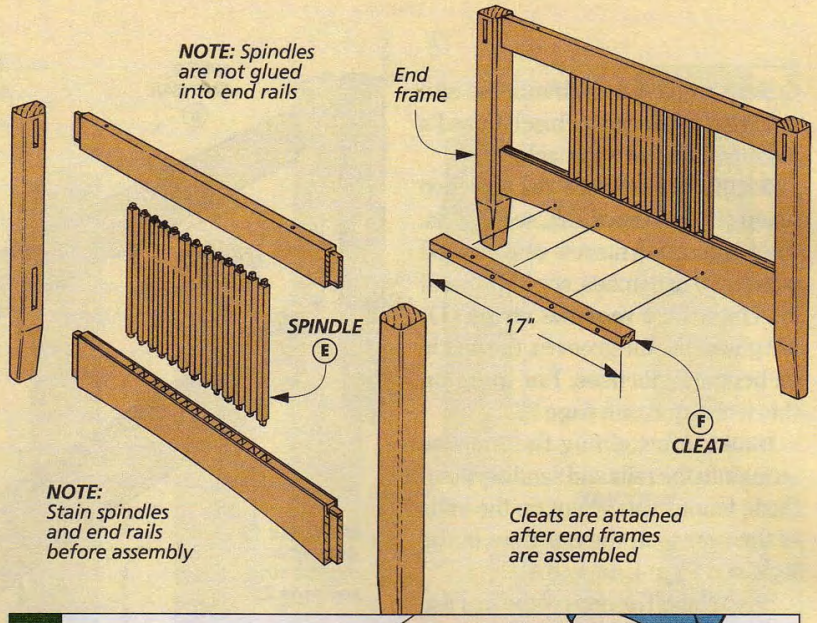

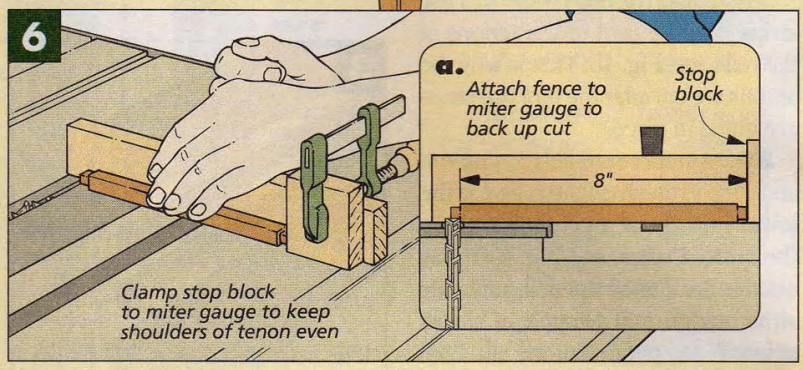

Then I glued and clamped the legs to the rails, see Fig. 7. Not having to worry about the spindles makes the gluing up process a lot easier.

CLEATS. After assembling the end frames, there's still one more piece to add to each frame — a cleat.

A **cleat (F)** is attached to the lower end rail of each frame to support a shelf, see drawing above and Fig. 8. These cleats are nothing more than two narrow strips of 3/4"-thick stock.

Before attaching the cleats to the end frames, I drilled three 3/16"-dia. countersunk shank holes in each cleat for the screws that will be used to attach the shelf, see Figs. 8 and 8b. Then I simply glued and screwed the cleats to the inside of the lower rails, see Figs. 8 and 8a.

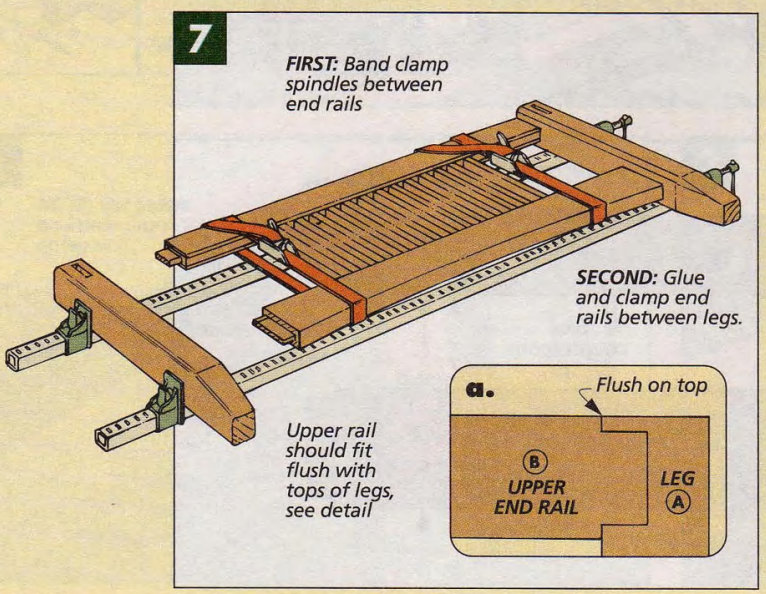

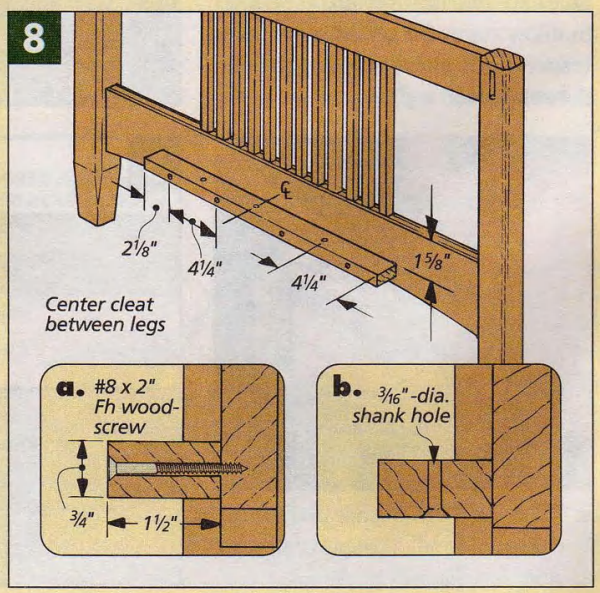

Stretchers & Shelf

With the end frames completed, you're more than halfway home. All that remains is to join the two end frames with a couple of stretchers and a shelf, and then add a top. I made the stretchers first so that I could assemble the base of the table and take measurements for the shelf, see drawing at right.

STRETCHERS. Each **stretcher (G)** is cut to size from a piece of 3/4"-thick stock. Then a tenon is cut on each end to match the mortises in the legs of the table, see detail 'a' at right.

Like the upper end rails, each stretcher is drilled and counterbored for three screws that will be used to attach the top, see detail 'a'.

SHELF. Aside from providing a place for books or magazines, the shelf serves another purpose. It acts as a lower stretcher, helping to tie the base of the table together.

I made the **shelf (H)** from an oversized, glued-up panel of 3/4"-thick stock. Shop Note: If you're planning on building a solid wood top for the table (see box on page 13) you may also want to glue-up a panel for the top at this time.

After gluing up the panel, I ripped the shelf to its finished width (22"), see Fig. 10. In order to determine the exact length, I measured the distance between the upper end rails (32" in my case). Then I trimmed the ends of the shelf to match this measurement.

Before attaching the shelf, I took the time to break the sharp edges by routing a small (1/16") chamfer along the front and back edges (both top and bottom), see Fig. 10a. (Note: The ends of the shelf are not chamfered.)

To attach the shelf, I placed it on the cleats and centered it from front to back. Then, using a pair of clamps to pull the end frames tight against the ends of the shelf, I drove screws up through the cleats into the bottom of the shelf, see Figs. 11 and 11a.

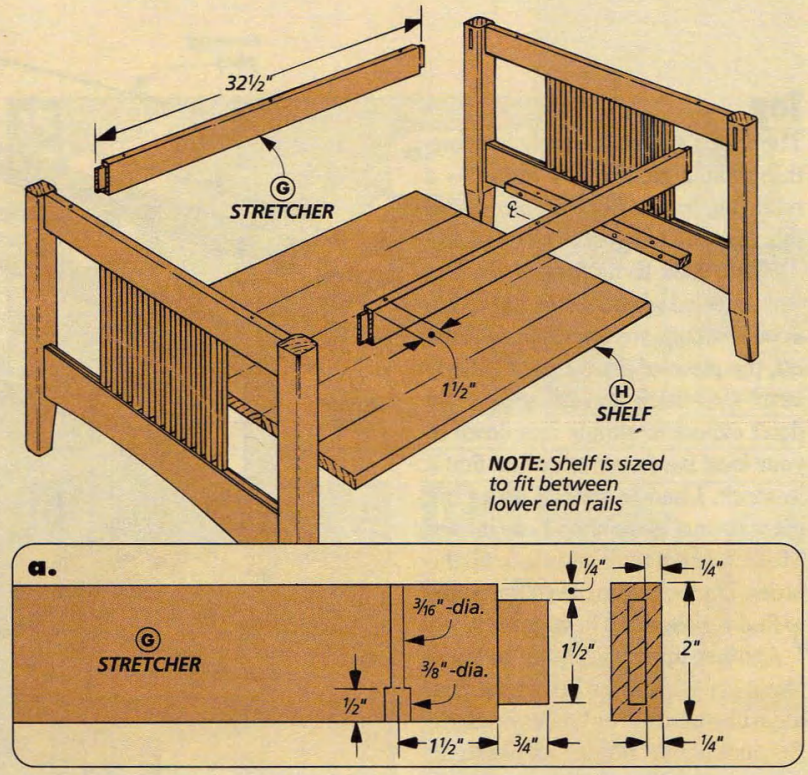

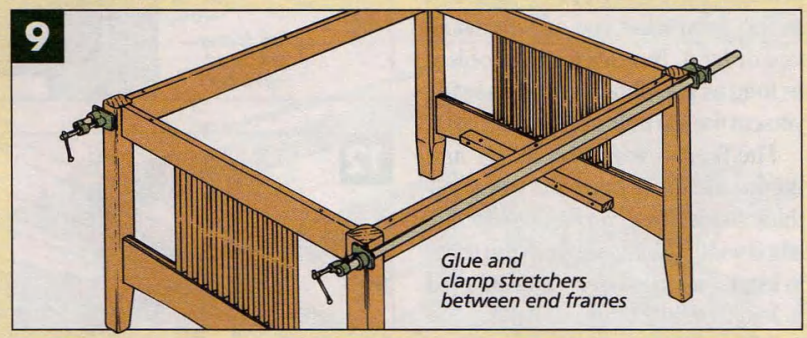

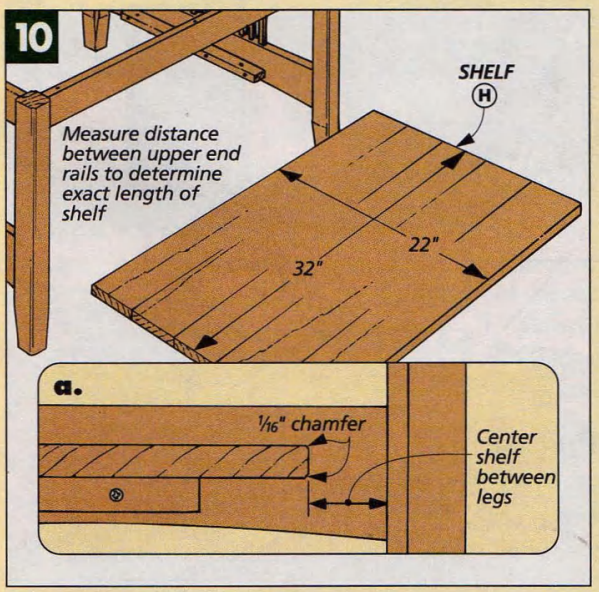

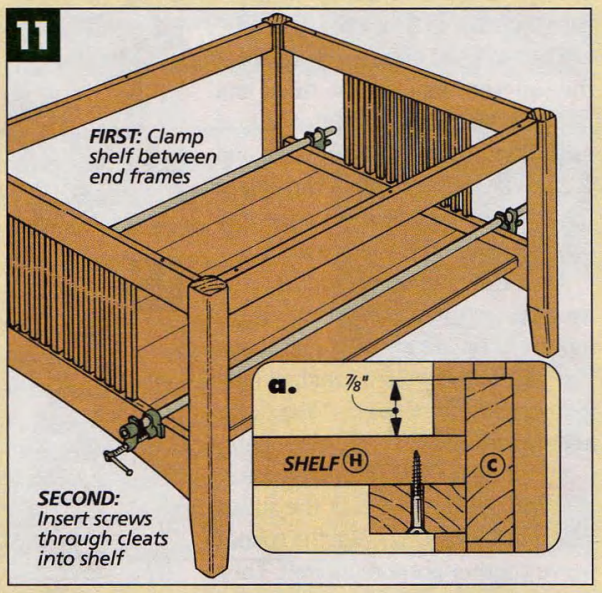

Top

The top of the coffee table is something like a picture in a frame — a really big frame. But the "picture" in this case is a piece of beveled glass.

BEVELED GLASS. If you've never worked with beveled glass before, there are a couple things you should know. First off, the piece of glass I used is fairly large (1/4"-thick and 24" x 32"). So don't expect to simply run down to your local hardware store and find it in stock. I had to special order the glass from a glass shop here in Des Moines, and it took a week to fill the order. Try looking in the yellow pages to find a glass shop in your area.

Another important thing to know about ordering glass is that the final measurements aren't always exact. Because of the cutting and polishing process, the glass can vary as much as 1/8" from what you specify when you order it. But this isn't a problem as long as you obtain the glass *before* you cut the top frame pieces to length.

The **frame front/back (I)** and **frame sides (J)** are cut from 3/4"-thick stock. They can be ripped to finished width (3 1/2"), but don't cut them to length just yet. They will be mitered to length a little later.

Before mitering the frame pieces, I cut a rabbet on one edge of each piece, see Figs. 12 and 12a. This rabbet creates a ledge for the glass top to rest on. Shop Note: The rabbet should be deep enough so the beveled edge of the glass will sit flush with the top surface of the frame (1/8" in my case), see detail 'a' above right.

Then to keep the outside edges of the top from looking too thick and heavy, I beveled the underside of each frame piece, see Figs. 13 and 13a. I did this by running the pieces through the table saw on edge and then sanding off the saw marks.

After rabbeting and beveling the frame pieces, they can be mitered to length to fit the beveled glass, see Fig. 14. Shop Note: To avoid making the opening for the glass too tight, allow a little extra (1/16") when figuring the length of the frame pieces.

SPLINES. To strengthen the miter joints, I added splines. But the splines serve another purpose as well. They

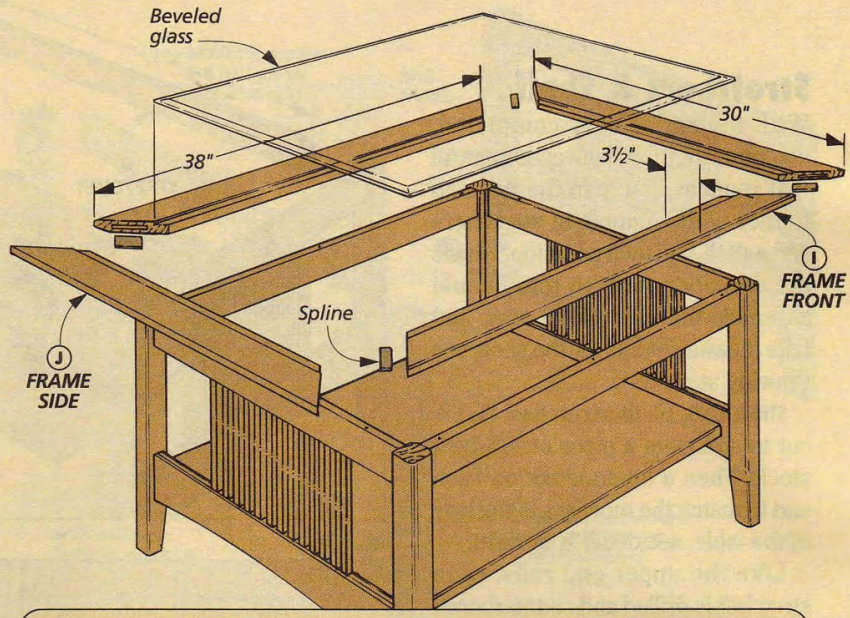

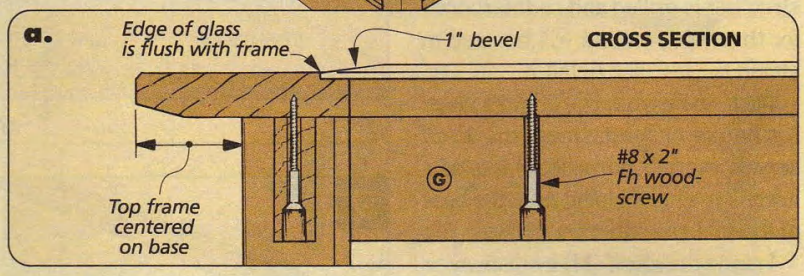

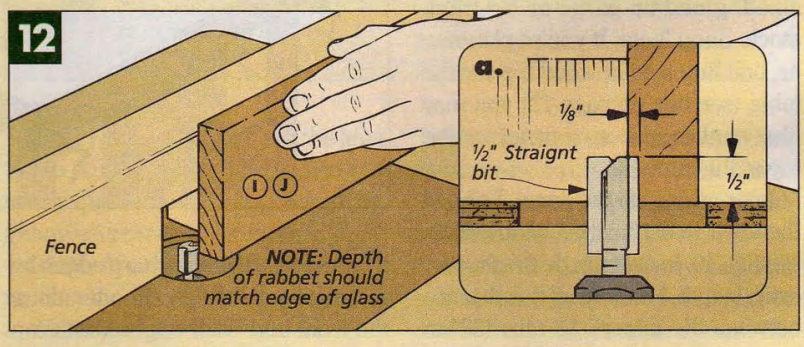

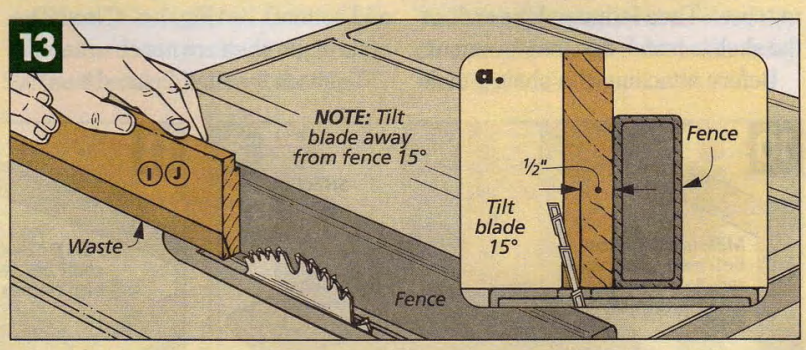

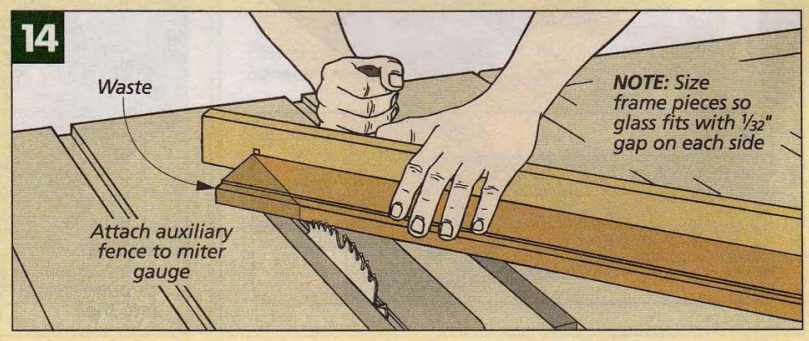

help to keep all the pieces even when gluing and clamping them together.

To cut the slot for the splines, I used a hand-held router and a slot-cutting bit, see Figs. 15 and 15b. Just be sure to stop the slot short of the edges of the workpiece, see Fig. 15a.

After routing the slots, I cut splines to fit. The thing to remember here is that for a strong joint, the grain should run across the joint line of the miters, see Fig. 15a.

ASSEMBLING THE TOP. Before gluing up the top, I dry assembled the pieces and clamped them together with band clamps to check the fit of the glass, see Fig. 16. But because I didn't want to take a chance on breaking the glass, I made a template out of hardboard the same size as the glass and used that to check the fit instead.

Once I was satisfied with the fit of the miters and the size of the glass opening, I glued up the frame pieces and clamped them back together. Then I used the template to check the glass opening again with the clamps in place.

CHAMFER. As a final detail, I relieved the sharp edges by routing a very small (1/16") chamfer all round the top edge, see Figs. 17 and 17a.

To attach the top, I simply centered it front-to-back and side-to-side. Then I drove screws up through the stretchers and upper end rails into the top, see drawing at right.

After staining and finishing the entire table, I added the glass top. W

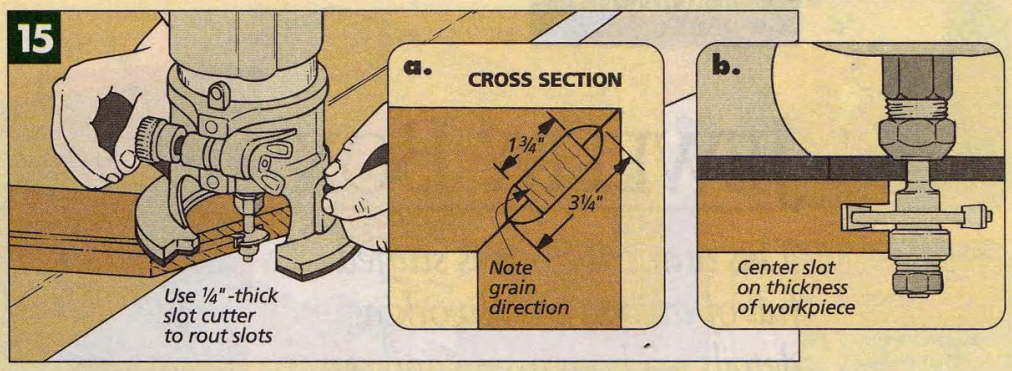

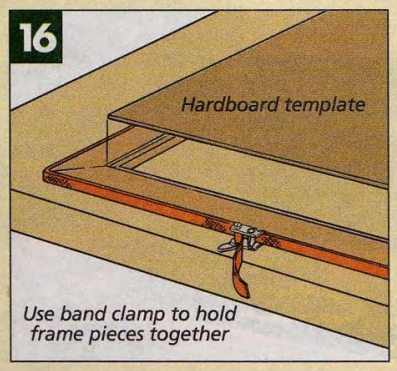

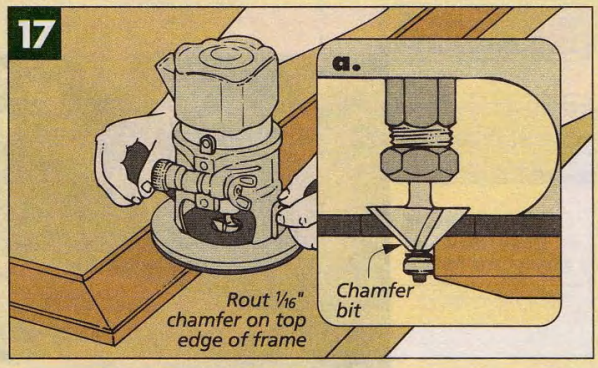

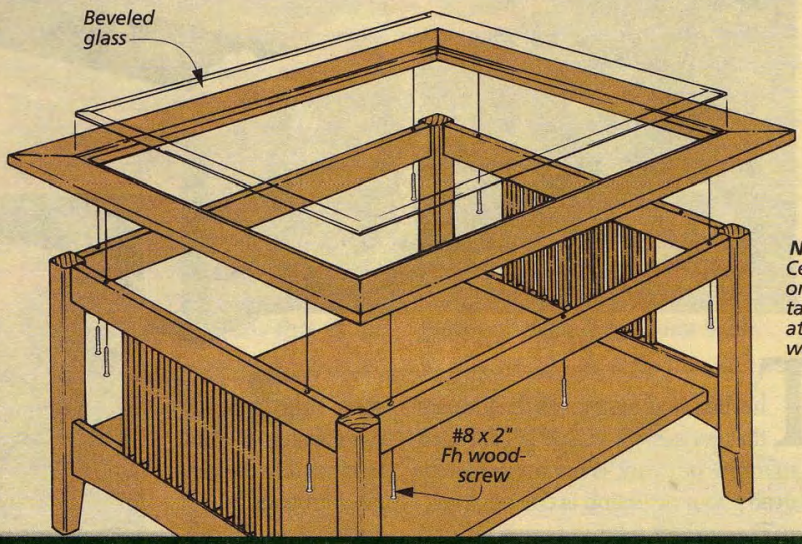

NOTE: *Center frame on base of table before attaching it with screws*

SOLID WOOD TOP

If you prefer a more traditional look for the coffee table, or if you're building it to match the sofa table in Issue No. 104 (see photo), you may want to substitute a solid wood top for the frame and glass top.

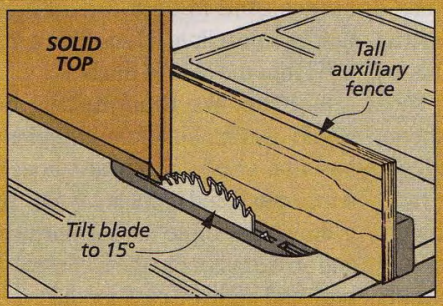

To do this, start by gluing up an oversize panel of 3/4"-thick stock. After the glue is dry, the panel can be trimmed down to a finished size of 30" x 38" (the same size as the frame for the glass top).

Once the panel is cut to finished size, the bottom edges can be beveled. But there's a small problem here. Because of the large size of the top, I was a little nervous about standing the top on edge and running it through the table saw. So to provide a little extra support, I attached a tall auxiliary fence to my rip fence, see drawing.

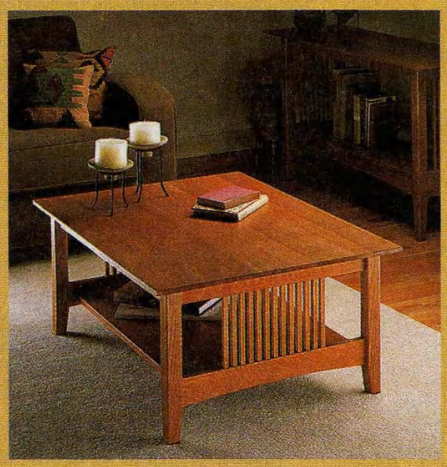

JEWELRY BOX

This attractive box is stuffed full of unique woodworking details — both inside and out.

▲ *One of the distinctive features of this jewelry box is the contrasting edges. This banding gives you the opportunity to use a unique three-way miter.*

This box is as elegant as the jewelry that goes inside it. And it's not hard to figure out why. What immediately grabs your attention is the edging.

The walnut edging wraps around the project almost like a ribbon around a gift box. It draws your eyes along the edges, creating a simple outline that's pretty dramatic. In fact, I like to think of the edging as a frame for the mahogany — especially the figured mahogany in the lid of the box, see inset photo.

THREE-WAY MITER. But the edging does more than just "dress up" the box. It also provides a unique woodworking challenge. That's because at each corner, where three edging pieces come together, you end up with a special joint: a three-way miter.

Like any miter joint, a three-way miter requires an accurate setup and careful fitting. But if taken step-by-step, there's really not much to it. (See the article beginning on page 20.)

However, there's much more to this jewelry box than the edging. In fact, there's quite a bit of woodworking packed into this box.

VENEER. In addition to the figured mahogany veneer on the lid, there's also veneer on the inside of the box. And if you've never worked with veneer, don't let that stop you. This is a great "first" project for veneer. The pieces are small, which makes them easier to work with. And all the edges of the veneer will be covered or rabbeted for the edging. So you don't have to worry about precise fits.

HARDWARE. Like the edging and veneer, the hardware is also a bit out of the ordinary. For one thing, none of it is visible from the outside of the box. The hinges are concealed barrel hinges. And to hold the lid open, there's a neat little lid stay that's mortised into the side of the box.

HUMIDOR. We thought this box would also make a fine humidor (a box that stores cigars at a specific temperature and humidity level). This is done with some unique hardware and an extra liner in the lid to seal the box. And both are easy modifications to make, see page 19.

Box

The construction of this box isn't unusual. The sides and ends are joined with splined miters, see drawing. And these pieces also capture the plywood top and bottom panels, so the assembly is totally enclosed. Later, the lid will be cut from the box.

SIDES & ENDS. To begin, I cut the **sides (A)** and **ends (B)** to width ($4\frac{1}{2}$") and mitered them to final length (13" and 10"), see drawing. Then I cut a kerf on each end for the spline, see detail 'a' at right. Shop Tip: When cutting the kerfs for the splines, use a blade that has its teeth ground flat across the top (like a rip blade), so the splines fit without any tiny gaps.

With the kerfs cut, I made the splines that will strengthen the corners. Just make sure the grain on the splines runs across the miter joint.

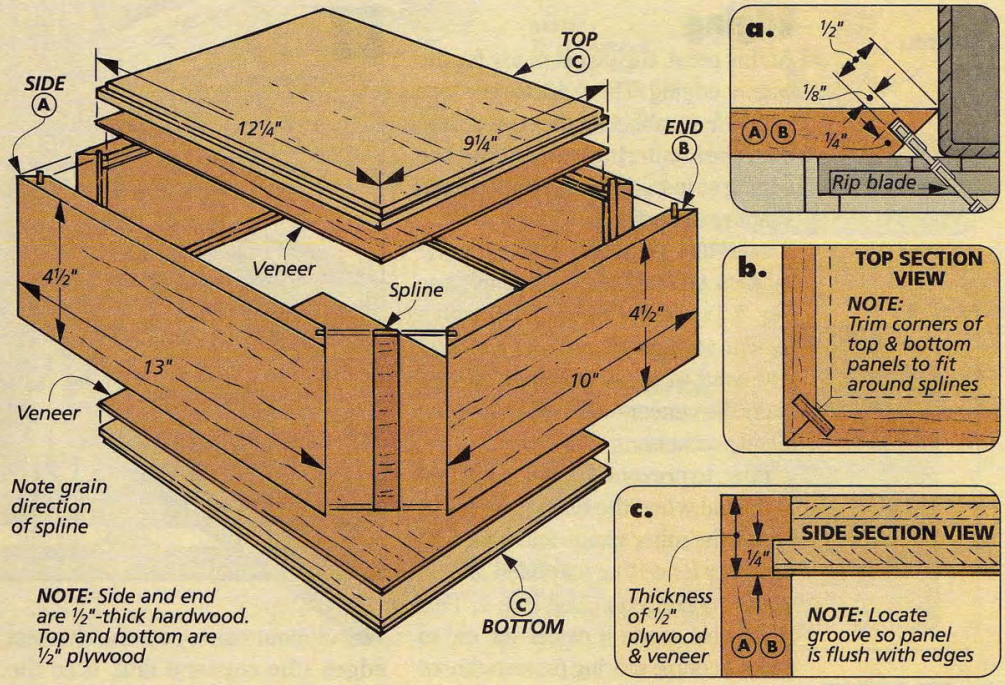

TOP/BOTTOM PANELS. Now the box can be dry assembled, and the **top** and **bottom (C)** panels can be cut to size from ½"-thick plywood, see drawing. I sized these panels ¼" larger than the box opening. (Mine were 9¼" x 12¼".)

At this point, I glued a piece of veneer to the *inside* face of each panel with contact cement. Even though the bottom panel will be covered later by a fabric liner, I veneered it too. Having the panels the same thickness makes the next two steps easier.

After trimming the veneer with a knife, I cut two ⅛"-deep grooves in each side and end piece, see Fig. 1. These grooves will hold the top and bottom panels. And I positioned them so the top and bottom panels would end up flush with the top and bottom edges of the box, see detail 'c' above.

Next, the *outside* faces of the top and bottom panels can be rabbeted to create ¼"-thick tongues that fit the grooves you just cut, see Fig. 2.

ASSEMBLY. At this point, the box is ready to be assembled. I used band clamps here. And since there are a lot of pieces to put together, I used white glue since it has a longer set-up time.

TOP VENEER. When the glue has dried, the top of the box can be veneered, see Fig. 3. But when you do this, you'll want the surface as flat as possible. So fill any gaps with wood putty and sand everything flush.

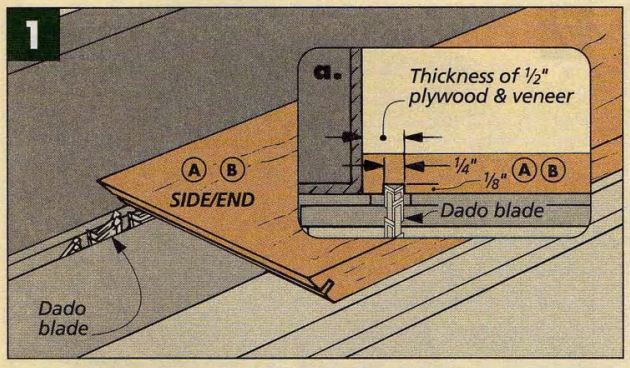

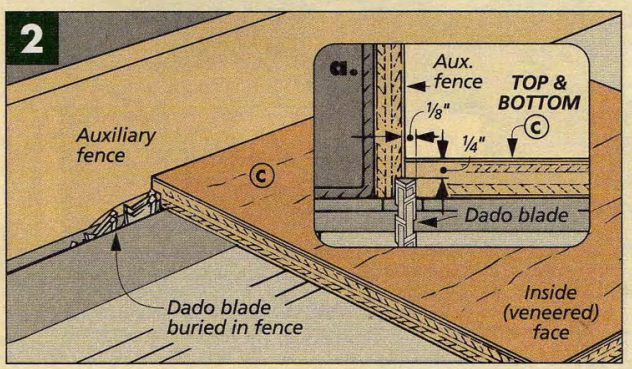

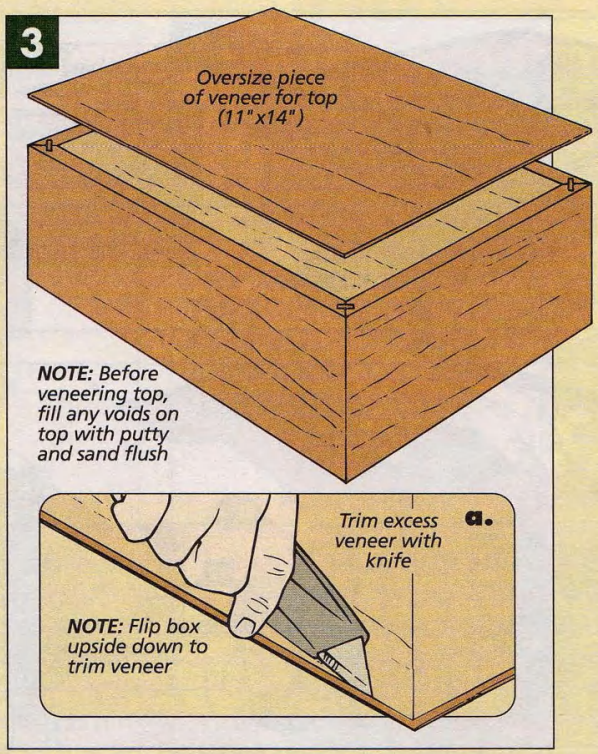

Edging

At this point, the box is ready for the walnut edging. There are three steps to this: first, rabbeting the edges of the box, then mitering and adding the edging strips, and finally, sanding and shaping the edging.

RABBETING THE EDGES. The 1/4" x 1/4" rabbets takes some extra care, see Fig. 4. I used the router table with a 1/2"-dia. straight bit and a fence. What you want to avoid is chipout (especially the veneer on the lid). So I took a few precautions.

First, to prevent chipout at the end of the cut when the bit exits the box, I used the miter gauge and added an auxiliary fence that extended almost to the router fence, see Fig. 4. This fence also made it easier for me to make a couple scoring passes without having to readjust the router fence, see Figs. 4a and 4b.

The two scoring passes were my second precaution. They prevented chipout on the faces of the box. So after the first scoring pass (Fig. 4a.), I flipped the box around and routed the second scoring pass on the adjacent face, see Fig. 4b. Now with both faces scored, there's less chance for chipout. So the third and final pass can be made at full depth, see Fig. 4c.

The last precaution I took to prevent chipout was to rout the shortest edges (the corners) first, then the short edges on the top and bottom of the box, and finally the long edges.

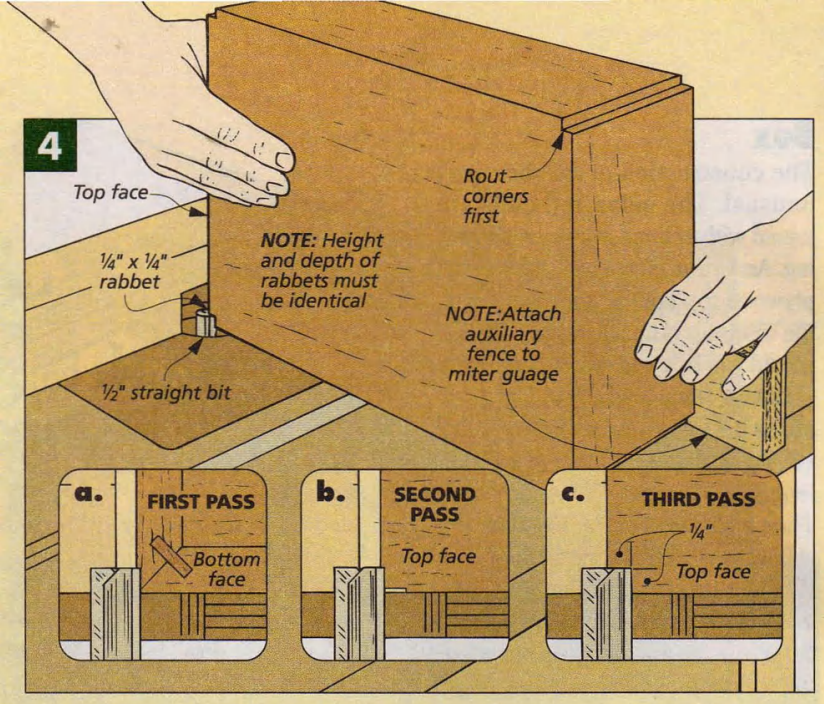

ADDING THE EDGING. Next, strips of walnut **edging (D)** are added to the rabbets, see Fig. 5. I planed down an oversize blank and ripped it into thin strips. Just make the strips slightly oversize in height and width so they can be sanded flush later, see Fig. 5a.

Mitering and gluing the edging strips is simply a matter of adding one piece at a time. For complete, step-by-step instructions, see page 20.

SHAPE EDGING. With the edging on, I sanded it flush by placing strips of adhesive-backed sandpaper down on my table saw and moving the box back and forth over the sandpaper.

Next, rout a 3/16" roundover on the edges of the box, see Figs. 6 and 6a.

CUT LID FROM BOX. At this point, the lid can be cut from the box, see Fig. 7. Raise the blade so it just cuts through the 1/2"-thick stock. Cut the short edges first. Then tape spacers into the kerfs and cut the long edges, see Fig. 7. With the lid and box separated, you can sand away the saw marks.

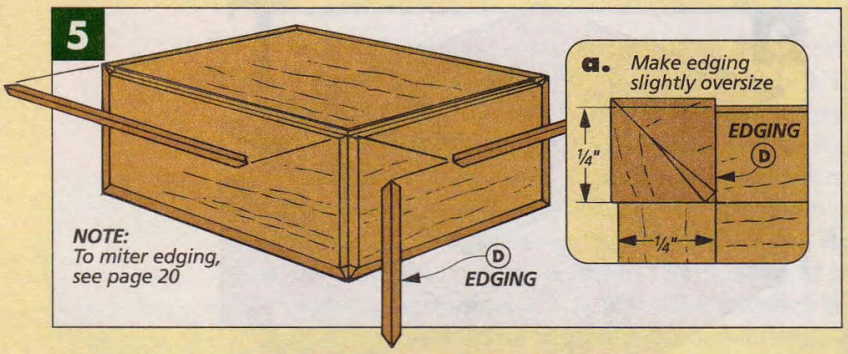

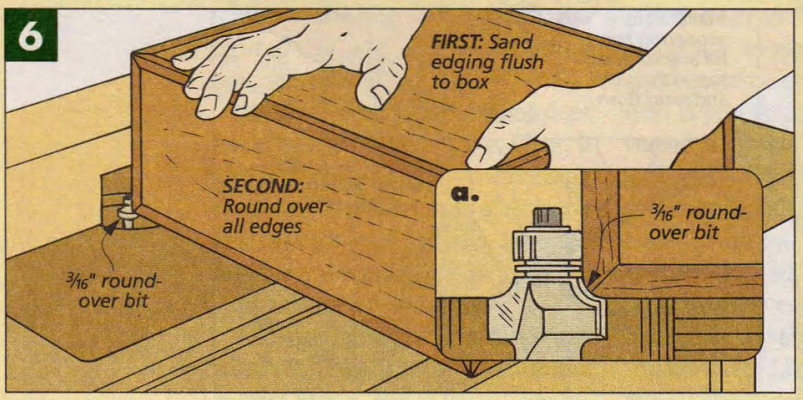

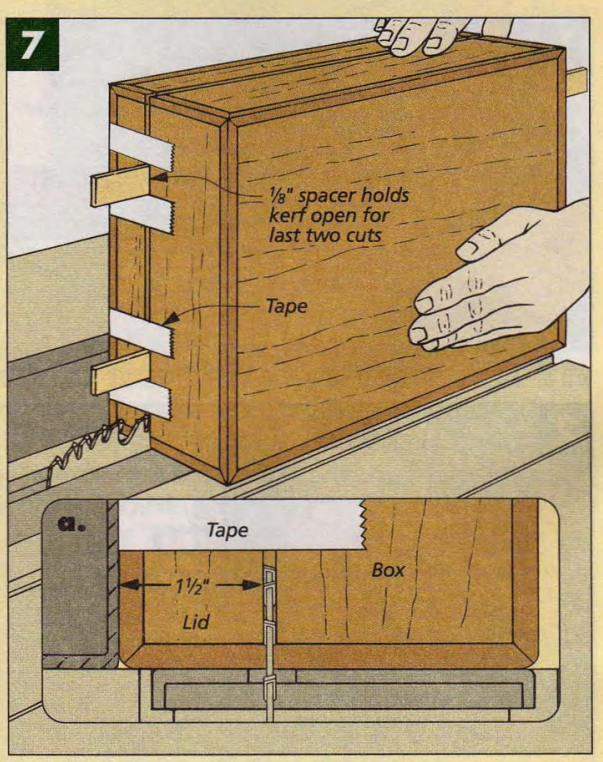

Liners

With the lid cut from the box, it's time to add a liner inside, see drawing at right. Each liner piece is slightly taller than the box, so they help keep the lid aligned. And they have a ledge for a small sliding tray.

LINERS. The **liner sides (E)** and **ends (F)** are cut from 3/8"-thick stock, see drawing and detail 'b'. And they're sized to stick up above the box 7/16". (Mine were 2 13/16" tall.)

But before mitering the liner pieces to final length, I softened their top edges by routing a 3/8" roundover, see detail 'a' at right. When that's done, the sides and ends can be mitered to fit in the box. (Mine ended up 9" and 12" long, see drawing.)

To complete each liner, I cut a 1 1/8" deep rabbet on the inside edge, see detail 'b'. This provides a little shoulder for the tray to rest on. But to do this safely, the pieces need a little extra support, so I taped the liners to some scrap boards when cutting the rabbets, see photo in margin at right. Shop Note: To end up with a square shoulder on the rabbet, use a rip blade.

Once the rabbets are cut, position the liners in the box but don't glue them in place yet — you'll need to remove them later. But for now, you can build the tray that rests on the shoulders you just cut in the liners.

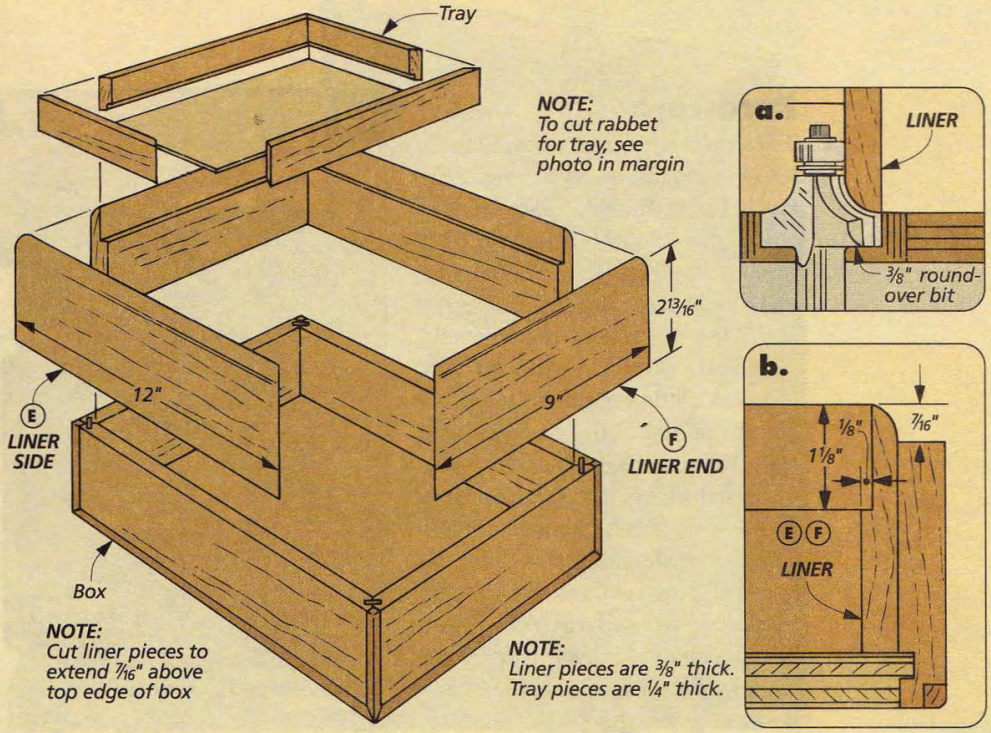

TRAY. I made my **tray sides (G)** and **ends (H)** out of 1/4"-thick stock, see Fig. 9. The tray should end up flush with the top of the liners (1 1/8" tall). And the sides (G) are mitered to fit the box tightly. (I sanded the tray to slide smoothly *after* it was assembled.) Then to hold a 1/4"-thick plywood bottom, I rabbeted the bottom edges of the tray pieces, see Fig. 9a.

VELVET & LEATHER. When the **bottom (I)** has been cut to size and the tray has been glued together, the next step is to add velvet lining to both the tray and the box, see Figs. 8 and 9.

To do this, simply cut a piece of posterboard so it will fit tight in the opening after the velvet has been wrapped around its edges, see Fig. 8a. (I allowed about 1/16" on each side.)

I also cut a piece of leather to cover the plywood on the bottom of the box, see Figs. 8 and 8a. But don't glue it in place until after the lid is mounted and the box is finished.

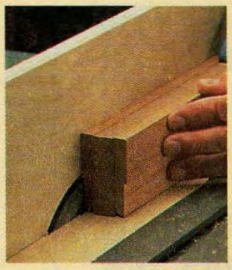

▲ *To support the liners while cutting the rabbets, I carpet-taped them to a scrap piece.*

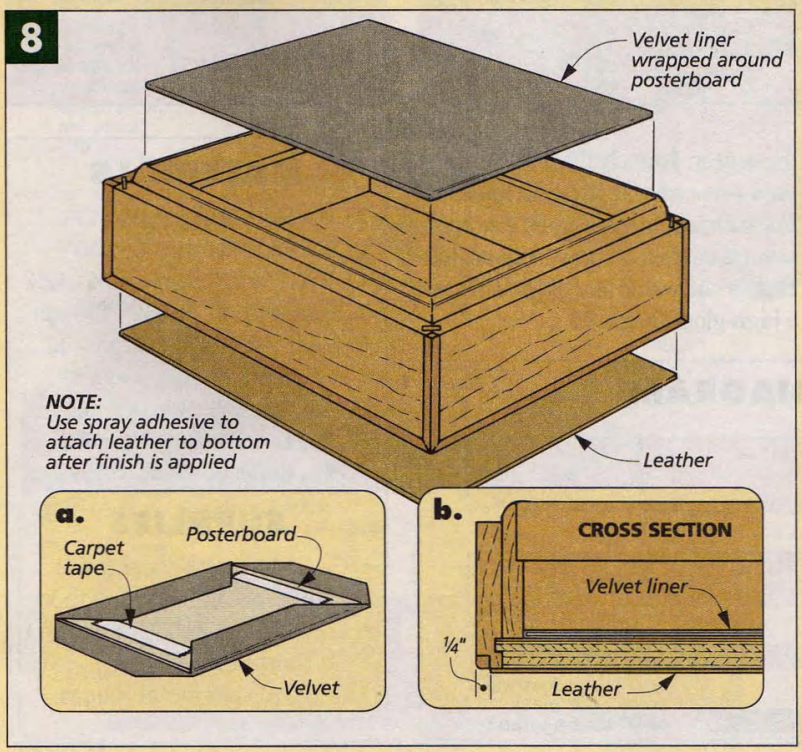

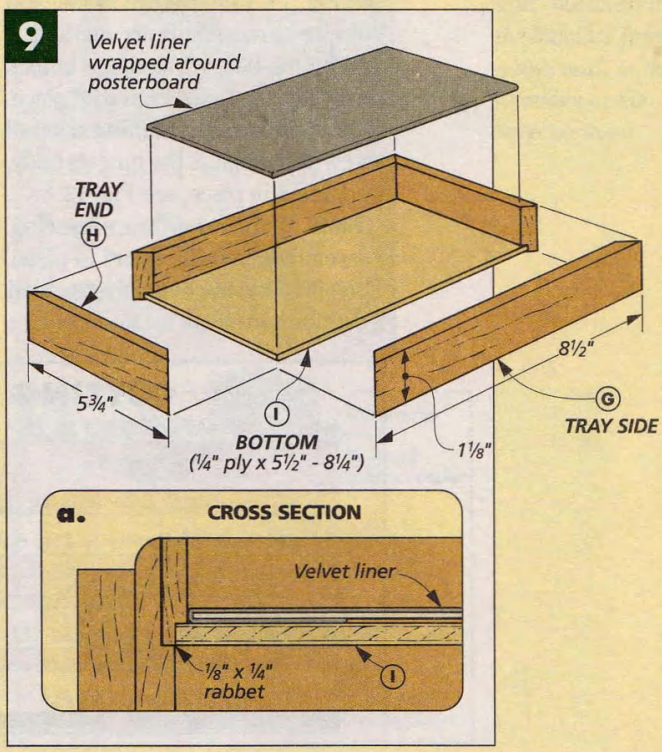

Hardware

To complete the jewelry box, all that's left is to mount the lid and apply the finish. I used concealed barrel hinges and a brass lid stay to attach the lid to the box, see Fig. 10. But before you can mount the hardware, the liners inside the box need to be removed.

LID STAY. Mounting the lid stay requires a little work. It fits into a 1/4" slot in the top of the box side, see Figs. 10a and 10b. But I should point out that the stay isn't where it's "supposed" to be (where the manufacturer suggests it should go). If I had followed the instructions, the lid stay would have covered part of the spline. So I decided to change its position slightly. This little alteration means the lid stops just short of 90°, but it still stays open. For more on installing the lid stay, see page 22.

HINGES. Compared to the lid stay, the barrel hinges are pretty simple, see Fig. 10. Simply drill 10mm holes in the lid and the box. The trick is to get the two sets of holes to align so the edges of the lid and the box are flush.

To do this, I laid out the center of the hinges on the box. Then I drove in small brads and snipped off their heads. Now to mark the centerpoint of the hinge on the lid, just align the lid with the box and press it down, see Fig. 11. Remove the brads, and both the centerpoints are marked.

With the holes drilled, the hinges can be inserted and "locked in" place. This is done by tightening a small screw that spreads the hinge's body, wedging it in place, see Fig. 12.

FINISH. With the hardware installed, I carefully glued the liners in place. Then to finish the box, I first sanded it carefully so as not to sand through the veneer. To apply the finish, I wiped on a few coats of General Finishes' Royal Finish. But you could also apply several coats of a spray lacquer (like Deft) if you would like the box to have a high-gloss finish. W

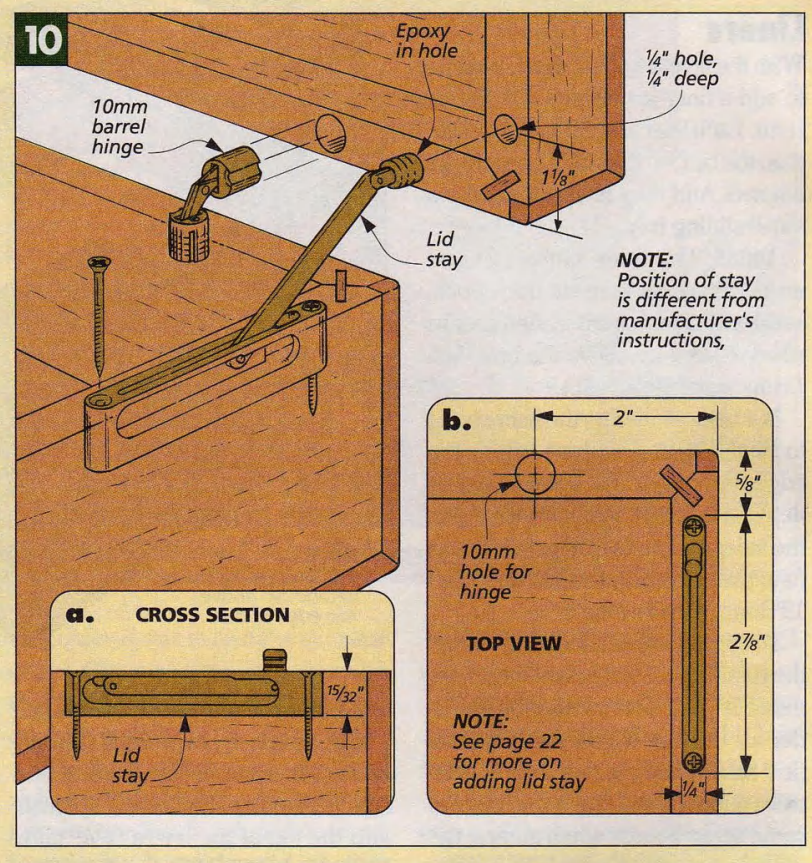

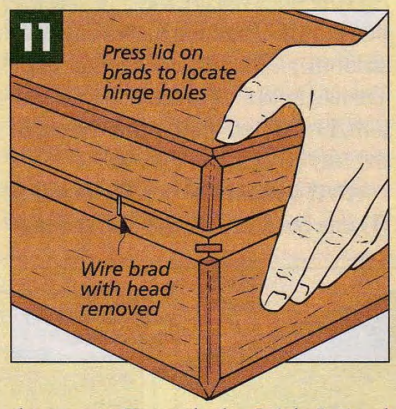

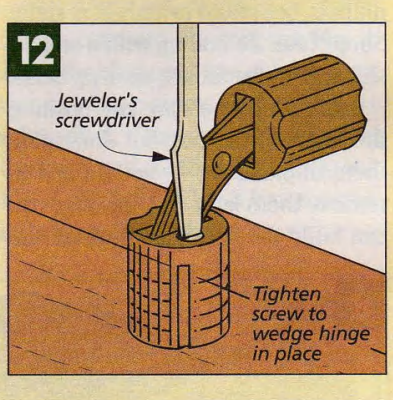

CUTTING DIAGRAM

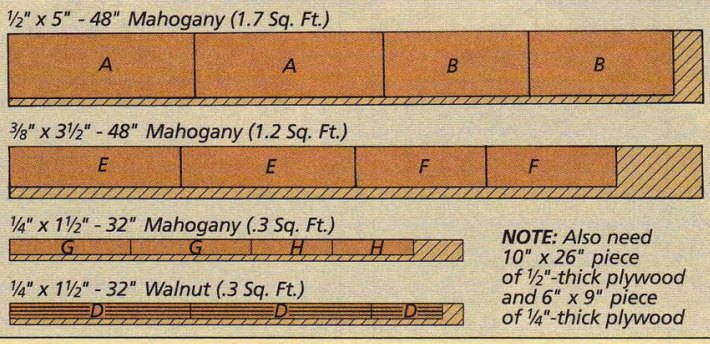

NOTE: Also need 10" x 26" piece of 1/2"-thick plywood and 6" x 9" piece of 1/4"-thick plywood

MATERIALS

A	Box Sides (2)	1/2 x 4 1/2 - 13	
B	Box Ends (2)	1/2 x 4 1/2 - 10	
C	Top & Btm. (2)	1/2 ply. x 9 1/4 - 12 1/4	
D	Edging (1)	1/4 x 1/4 - 110 rgh.	
E	Liner Sides (2)	3/8 x 3 rgh. - 12	
F	Liner Ends (2)	3/8 x 3 rgh. - 9	
G	Tray Sides (2)	1/4 x 1 1/8 x 8 1/2	
H	Tray Ends (2)	1/4 x 1 1/8 x 5 3/4	
I	Tray Btm. (1)	1/4 ply. - 5 1/2 x 8 1/4	

SUPPLIES

- (3) 11" x 14" Veneer (rgh.)
- (1) 10" x 13" Leather (rgh.)
- (2) 10" x 13" Fabric Liner (rgh.)
- (1) Mortised Lid Stay
- (1 pr.) 10mm Barrel Hinges

HUMIDOR

Instead of jewelry, this box can be built to hold cigars. To keep the cigars fresh, the inside of a humidor must be kept at a constant temperature and humidity level. So it features a hygrometer to measure humidity and a humidifier to add moisture, see photo and Fig. 2. (See page 35 for sources.)

SPANISH CEDAR. But there are a few other changes. First, the inside of the box is made with Spanish cedar. (This includes the veneers, liners, dividers, and mounting block.) Spanish cedar is stable and rot resistant — ideal for the humid conditions inside the box. But keep two things in mind: Spanish cedar is different than aromatic cedar (though it does have a spicy aroma). Plus, you don't want to apply any finish to the inside of the humidor.

LINERS. The liners for the humidor are also different. For one thing, there is no tray, so the liners in the box aren't rabbeted, see detail in margin.

In addition to the box liner, I also added a mating liner in the lid, see detail in margin. This liner acts as a gasket to seal the box.

When making the lid liners, the 3/8" cove leaves a fragile tip on the edges of the pieces. So when routing the cove, I taped on a scrap piece for support, see Fig. 1. And I left this piece on when trimming the liners to final size, which equals the depth of the lid *minus* 1/16". (Mine were 15/16" tall.)

DIVIDERS & MOUNTING BLOCK. All that's left now are a couple dividers with holes for air circulation and a mounting block for the hygrometer and humidifier, see drawing and Fig. 2.

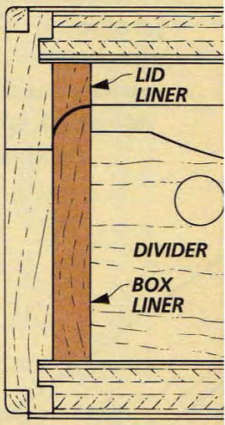

▲ *When the lid is shut, the liners in the humidor form a tight seal, so the humidity inside stays constant.*

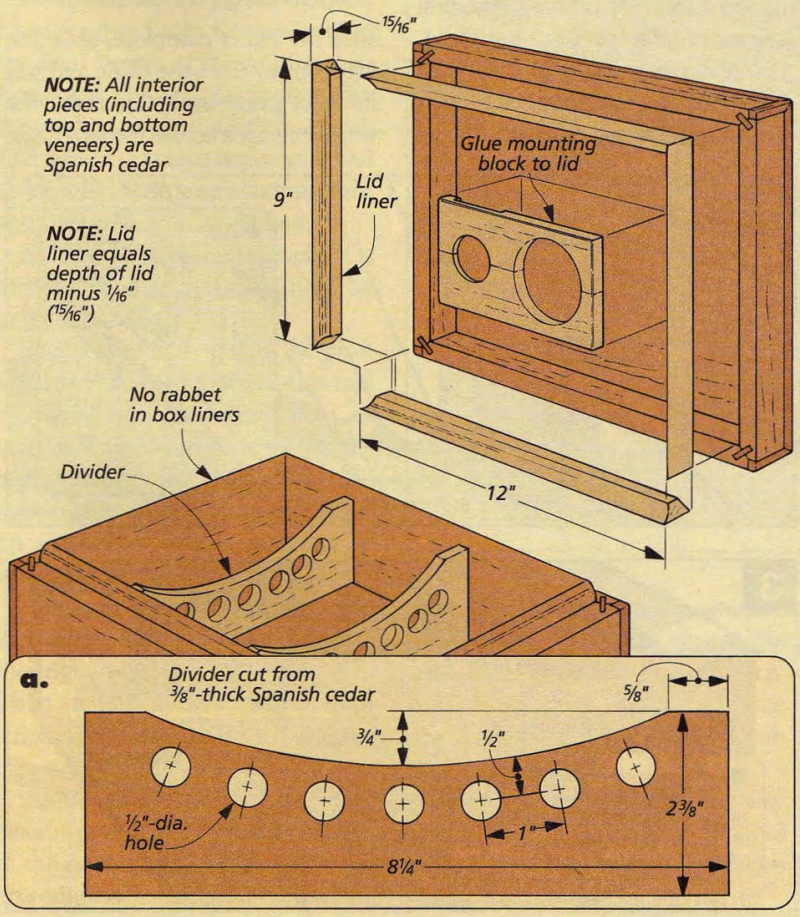

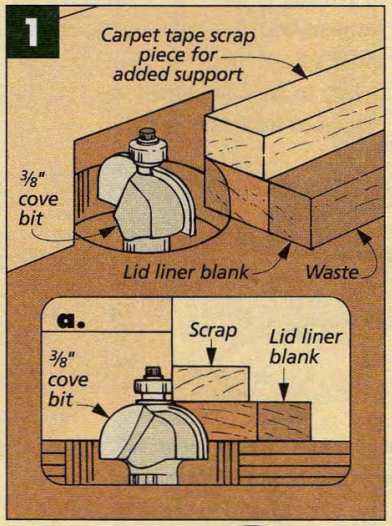

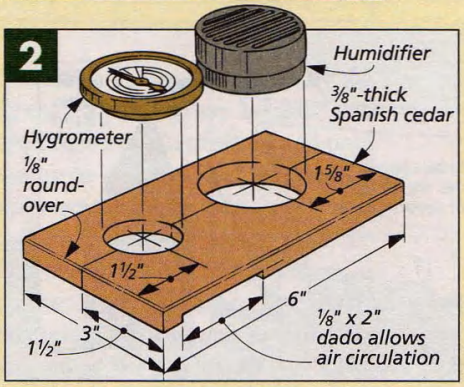

THREE-WAY MITERS

Three edging pieces meet at each corner of the jewelry box. This creates an opportunity for a unique woodworking joint: A three-way miter.

▲ *With three-way miters, each end is mitered twice. And there's really no trick to getting the pieces to fit. You simply add one at a time.*

Adding the walnut edging was a great way to "dress up" the jewelry box on page 14. But it also made for some interesting woodworking. At each corner, where three edging pieces meet, you need a special joint: a three-way miter, see drawing.

Now don't let the name scare you. Three-way miters aren't as difficult as they might sound. The miter gauge setting is the same as with a regular miter — 45°. The only difference is that each end is mitered twice, with the piece rotated between passes.

MITER GAUGE ACCURACY. The first step to cutting a three-way miter is the same as with a regular miter: Set the miter gauge to 45°, see Fig. 1a. This is key to how smoothly everything else goes from this point on.

Shop Tip: To check the miter gauge angle, I cut two wide scrap pieces and set them edge-to-edge, see drawing below left. This way, I can use my try square to check the accuracy. And the wider pieces exaggerate any error.

With the miter gauge set, next I attached an auxiliary fence to support the pieces, see Figs. 1 and 1a. However, because the edging pieces for the jewelry box were so small, I also added a 1/8"-thick hardboard base underneath the auxiliary fence.

BASIC CUT. With three-way miters, both ends of every piece get cut with the same two-step process. The first step is a regular miter cut, see Fig. 1.

Note: When making the miter cuts on the edging, you don't need to push the piece all the way across the blade. After the cut is complete, slide the edging away from the blade and pull the miter gauge back. (Don't pull the workpiece back across the saw blade

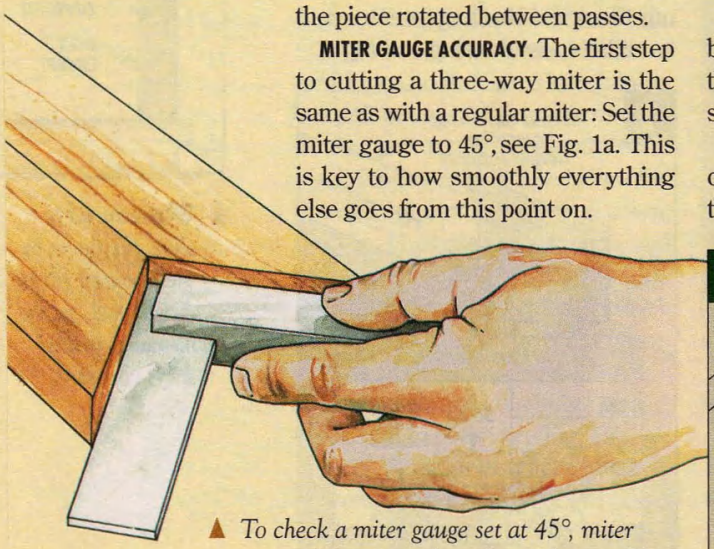

▲ *To check a miter gauge set at 45°, miter two wide pieces and set them edge-to-edge. Then use a try square to check the setup.*

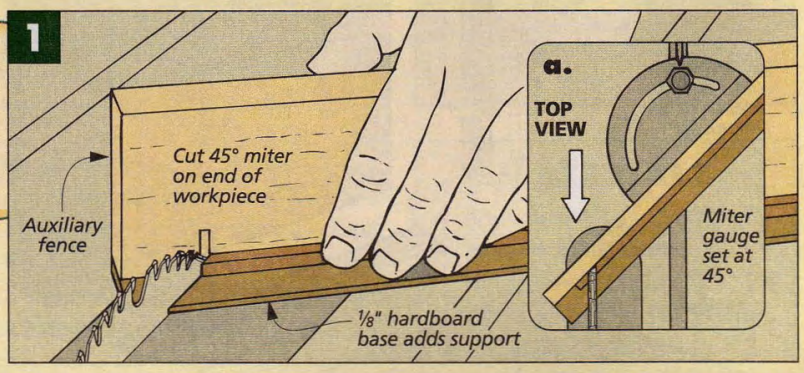

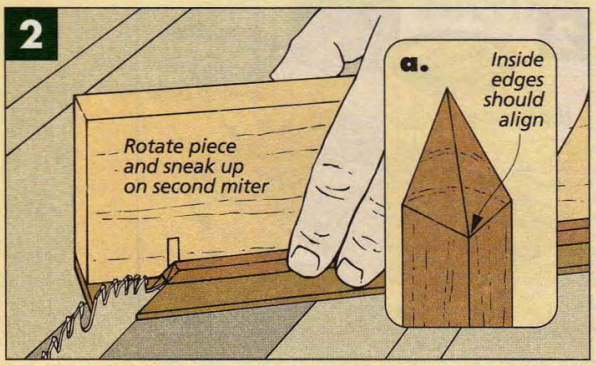

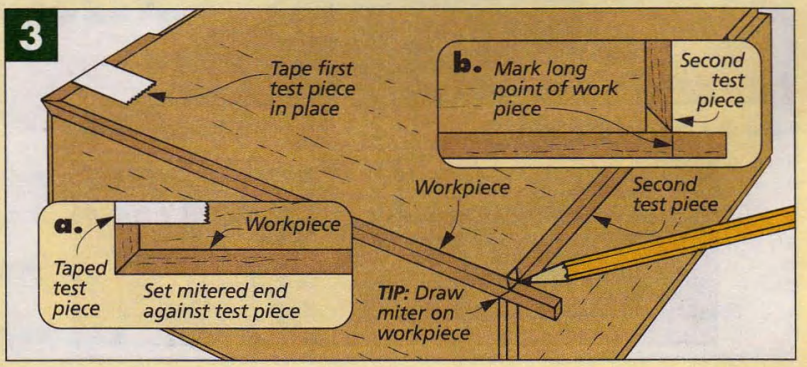

or it may nick the tip of the piece.)

The second step is to rotate the edging piece so the bevel is facing up and cut a second 45° bevel, see Fig. 2. The goal of this second bevel is to cut the first bevel exactly in half. To do this, simply sneak up on the cut, checking it between passes. When the edge between the two bevels lines up with the inside edge of the edging piece, you know that both bevels are perfect, see Fig. 2a.

CUTTING TO FIT. Of course, there's more to this joint than just mitering the ends of the pieces. You also need to get them cut to length. Here a couple test pieces will come in handy.

After mitering one end of the first workpiece, I carefully set it against a mitered *test piece* and taped the test piece in place, see Figs. 3 and 3a. Now using a second test piece, I marked the "long point" on the opposite end of the workpiece, see Figs. 3 and 3b.

Shop Tip: With the workpiece marked, I sketched in the miters to be cut on the piece, see Fig. 3. This way, I didn't have to think too hard about which way to cut the miters.

Even with the workpiece marked, it's still a good idea to sneak up on the final length of the edging, see Figs. 4 and 4a. Check the fit often with the two test pieces until it's just right. And if the workpiece happens to end up too short, save it for a shorter piece and start over with a new one.

GLUING IN PLACE. When the piece is mitered to length, it's ready to be glued in place, see Fig. 5.

Shop Tip: Before adding the glue, I sanded the edge where the two bevels come together, see drawing in margin. This ensures the edging fits well and also creates a little space for excess glue. Just don't sand near the tip of the miter, or you could end up with a gap at the point.

Now apply a small bead of glue to the rabbets. Use a test piece to line up the edging piece and press it in place. Then to hold it there, simply wrap strips of masking tape around the edging, see Fig. 5.

SEQUENCE. While the glue on the first piece is drying, you can move around to the next edging piece. Here, the procedure is the same. Only this time, instead of butting the piece against a test piece, you can fit it against the edging piece you just glued in place. And when gluing the new piece against the first, apply a little glue to their mitered ends.

I found it easiest to work my way around the top and bottom faces of the box first. This way, the last pieces to add are the corners, see Fig. 6.

CORNERS. The corner pieces are different than the others because you can't check the fit of either end until the piece is cut to final length. You just have to sneak up on the fit.

But it's still a good idea to mark the final length directly from the box. To do this, I stood the piece against the box and used a square to mark the long point, see Fig. 6a. W

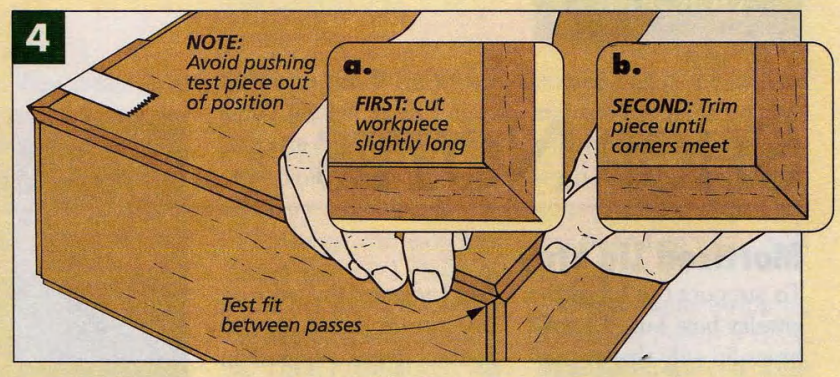

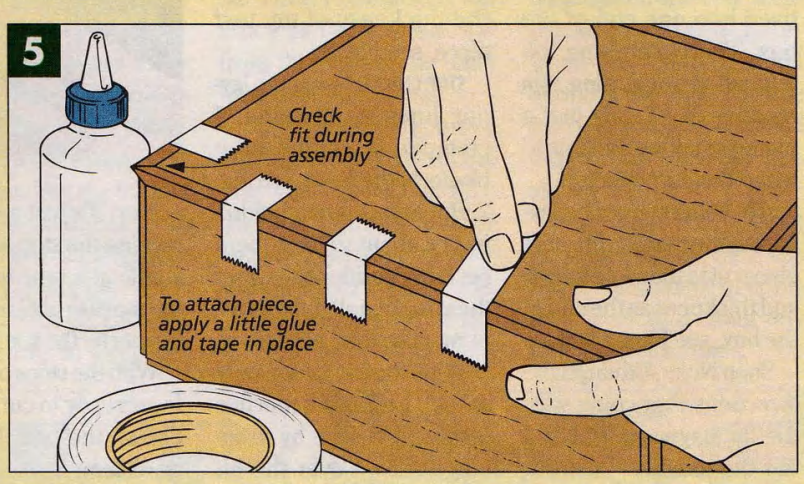

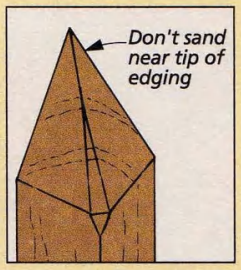

▲ *Tip: Before gluing the miters together, relieve the inside edge slightly with sandpaper.*

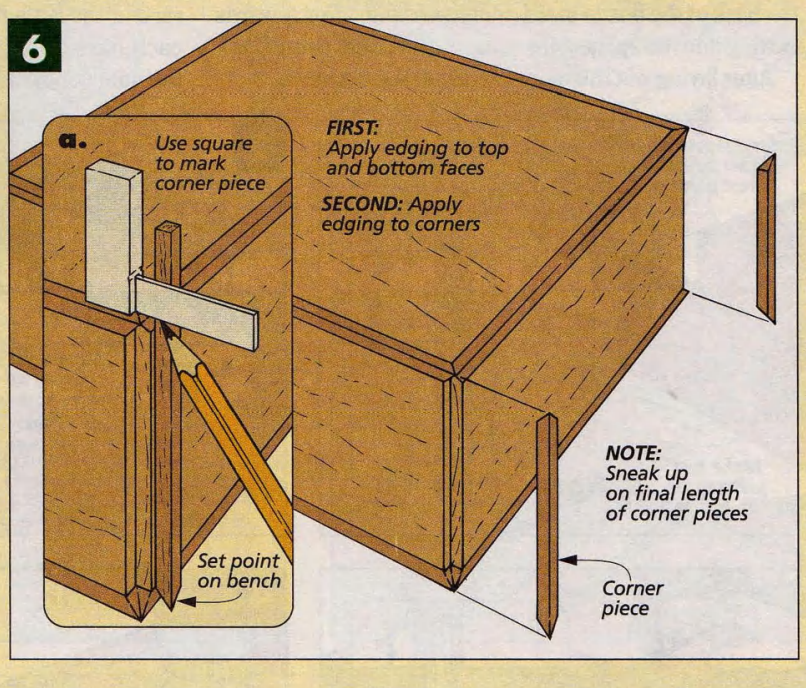

SHOP NOTES

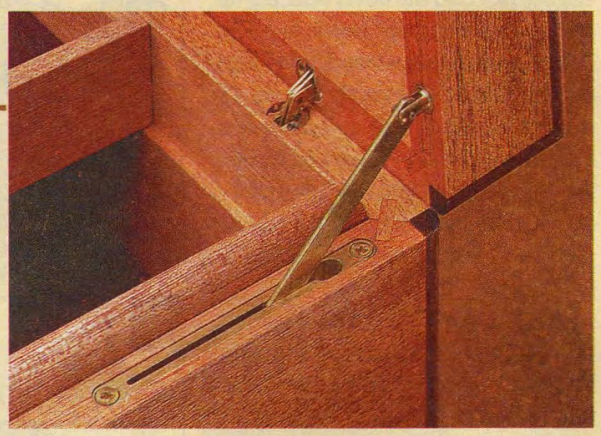

Mortised Lid Stay

To support the lid of the jewelry box, I used a solid brass lid stay that is mortised into one end of the box. There's nothing too difficult about cutting this mortise. It's really just a matter of taking the time to make the proper setup.

TEST PIECE. I started by laying out the mortise on a test piece cut to the same length and thickness as the end of the box, see Figs. 1 and 1a.

Shop Note: Although the directions that come with the lid stay say 1/2", I laid out the mortise 5/8" from the back of the box to avoid cutting into the spline joint.

After laying out the mortise, I adjusted the fence on my router table so the router bit was centered on the thickness of my test piece, see Fig. 3a.

STOP BLOCKS. Using the layout lines as a guide, I clamped a couple stop blocks to the fence, see Fig. 2. But at this point, I didn't worry about getting them perfectly positioned — I set them to cut a slightly shorter mortise than necessary.

With the bit raised only an 1/8", I routed a mortise on the test piece by dropping it down over the bit and pushing it first towards one stop and then back against the other.

Now it's just a matter of moving the stop blocks out a little at a time to enlarge the mortise until the lid stay fits perfectly, see Fig. 2a.

With the stops positioned I was ready to cut the mortise on the box. I did this by making multiple passes, raising the bit a little after each pass until I reached the final depth of 15/32", see Figs. 3, 3a, and 3b.

To attach the stay, simply drop it in the mortise and use it as a template to drill a couple holes for the screws, see Figs. 4 and 4a.

Finally, to mount the lid end of the stay, drill a 1/4"-dia. hole on the edge of the lid, 1 1/8" from the back, see Figs. 5 and 5a. Then epoxy the stay into the hole.

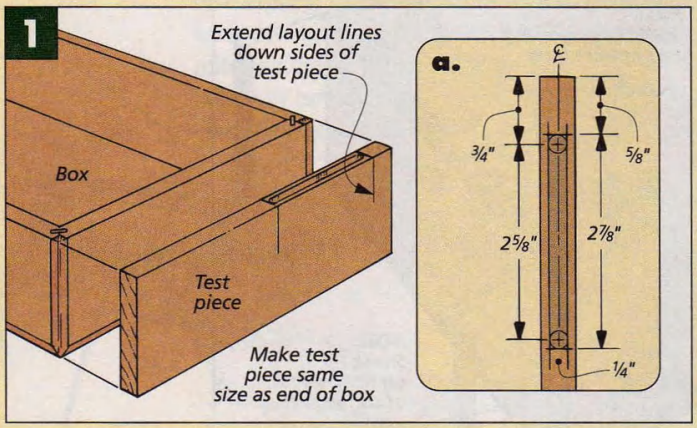

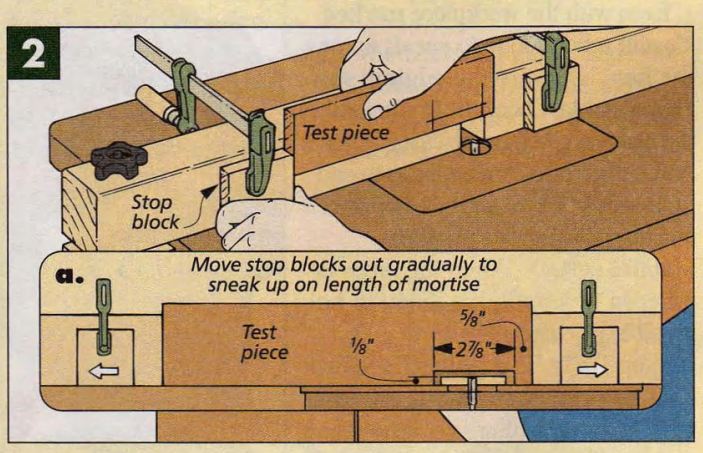

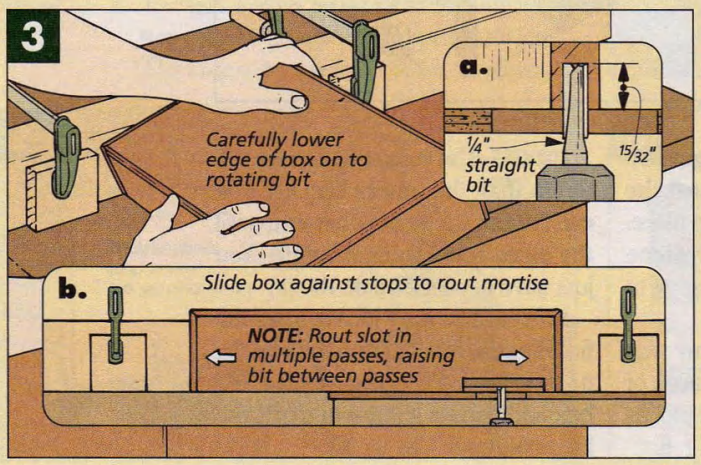

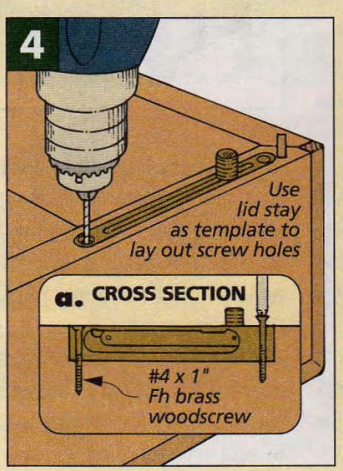

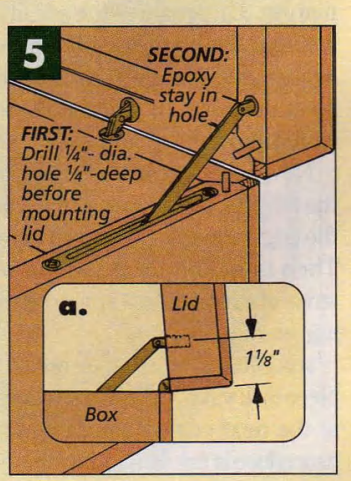

Mortise Strips

Instead of making individual mortises one at a time for the spindles in the coffee table (see page 6), I used a different approach. First I cut a groove on one edge of each end rail. Then I glued in a "mortise strip."

GROOVES. There's not much to making the grooves. I cut them in two passes, flipping each rail end for end between passes to ensure that the grooves will be centered on the thickness of the workpiece, see Figs. 1 and 1a.

MORTISE STRIPS. The mortise strips are just narrow strips with notches cut in them. When glued into the grooves, they create mortises for the spindles.

But instead of trying to cut the notches in narrow, individual strips, I started with a wide blank cut to the same length as the rails ($24\frac{1}{2}$"). Then after the notches are cut, the blank will get ripped into strips. (I made the thickness of the blank the same as the depth of the grooves in the rails.)

NOTCHES. To cut the notches, I used a dado blade and a table saw. But the trick is to keep the notches evenly spaced. To do this, I used a simple indexing jig.

To make the jig, I started by clamping an auxiliary fence to the front of my miter gauge. Then I cut a dado through the center of my blank and through the auxiliary fence, see Fig. 2.

To keep the notches evenly spaced, I glued an index key into the notch in the auxiliary fence, see Fig. 2a. Then I readjusted the fence so the key was $\frac{5}{8}$" from the edge of the dado blade, see Figs. 3 and 3a.

Next, I cut six more notches on one side of the center notch, see Fig. 4. To do this, I simply placed each newly cut notch over the key to cut the next one.

Then after cutting the notches on one side, I turned the piece around and cut six more notches on the other side of the center notch, following the same procedure. Note: You should end up with a total of 13 notches.

RIPPING. Before ripping the strips, I drew a reference line on one end of the blank, see Fig. 5. Later when the rails are glued between the legs, this line will help you orient the end rails so the mortises line up, see Fig. 6.

Shop Note: When gluing the strips into the rails, use a sparing amount of adhesive to avoid getting any glue in the mortises.

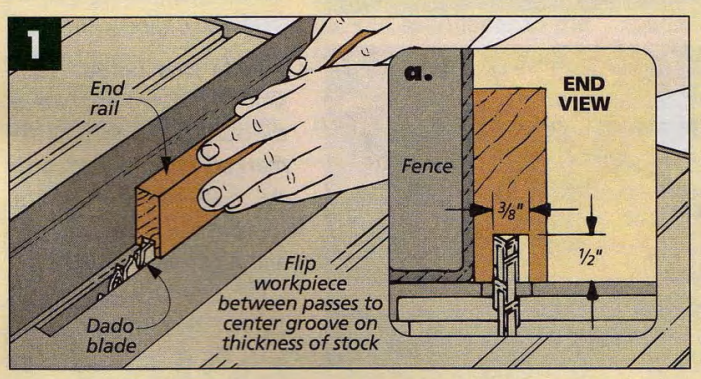

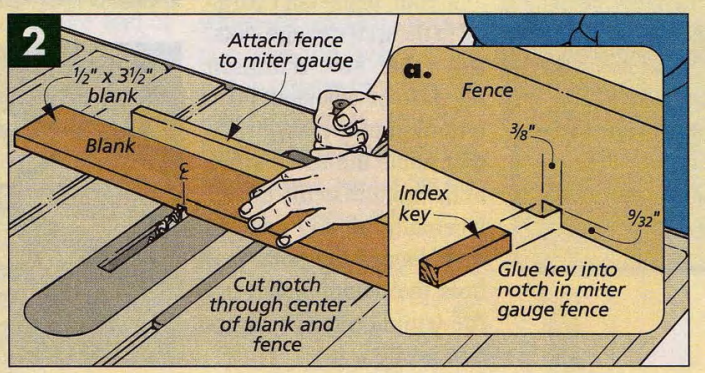

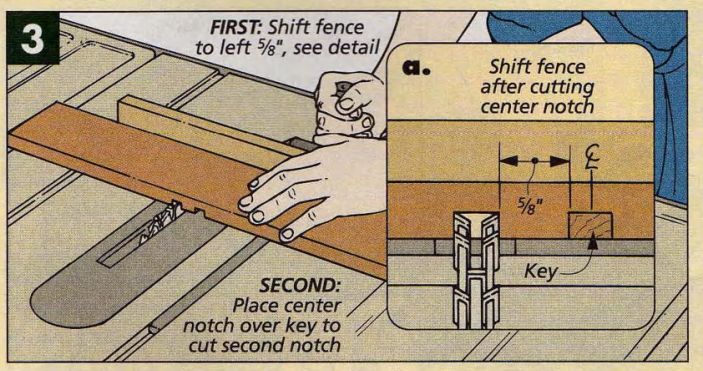

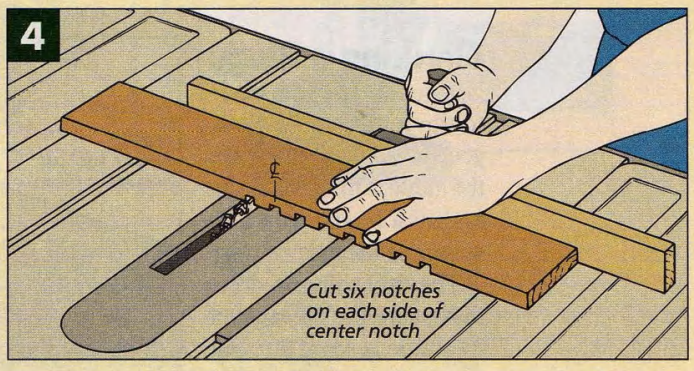

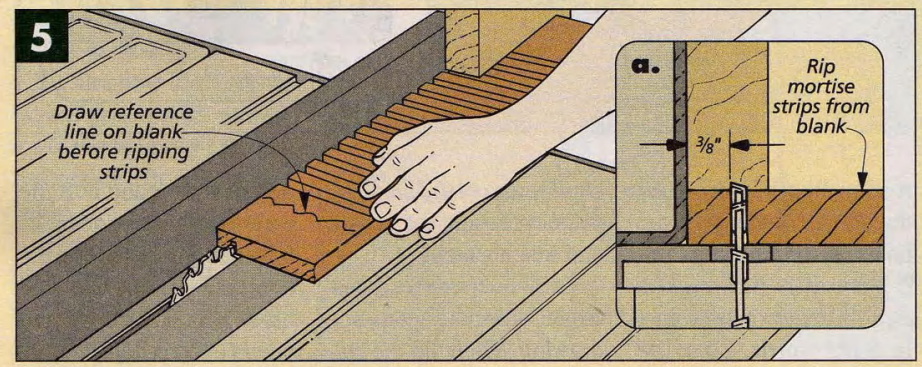

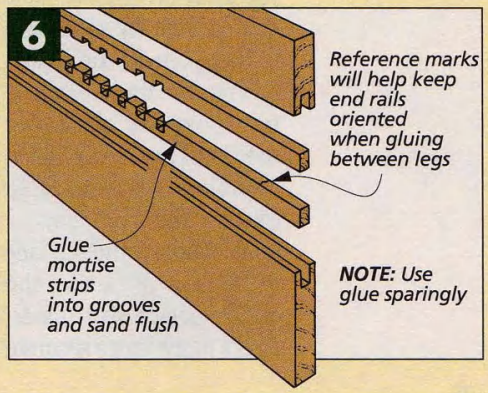

CROSSCUTTING TIPS

Over the years, we've come up with quite a few solutions for achieving accurate crosscuts with a table saw. Here are some of our favorites.

Blade Alignment

To get an accurate crosscut on the table saw, the blade has to be parallel with the saw's miter gauge slots. A quick way to check this is to use a combination square and a marker, see the photos at right.

If your blade isn't parallel to the miter gauge slots, the table saw trunnion needs to be adjusted. (The trunnion is the assembly that holds the saw's arbor to the bottom of the table.) Normally, all you need to do is loosen the bolts that hold the trunnion and tap the trunnion in the direction needed.

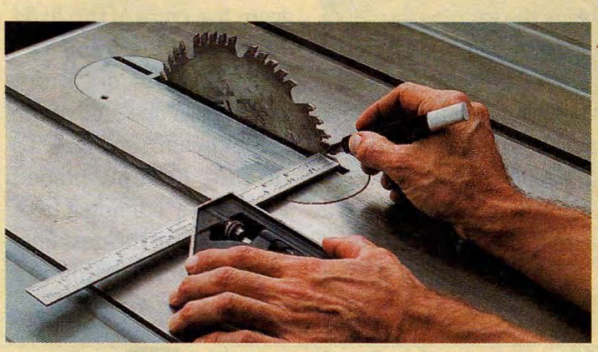

◄ ***Mark tooth.*** *To check that your blade is parallel with the miter gauge slot, first mark a tooth. Then place a square in the slot and adjust it so the end of the square just touches the side of the marked tooth.*

◄ ***Rotate saw blade.*** *Next, slide the square and rotate the blade backward until the marked tooth aligns with the square. If the square just touches the blade, the slot and blade are aligned.*

Quick Tip

Whenever possible, crosscut with the good side of the workpiece face up. This way, any tear-out will be on the side that won't be seen.

Checking a Blade

Besides aligning the blade to the miter gauge slots, you should also square it to the table. Otherwise, the end of a board won't be square to the face.

The first thing to do is make sure the tilt angle of the blade is set at 90°. But you can't rely on the table saw's gauge for accuracy.

So to check the blade, first remove the insert plate to expose the blade, see detail 'a'. Then using a good combination square, I extend the rule on the square below the surface of the saw. By using the entire surface of the blade, I get a much more accurate reading than if I were to set the square against the top half of the blade only.

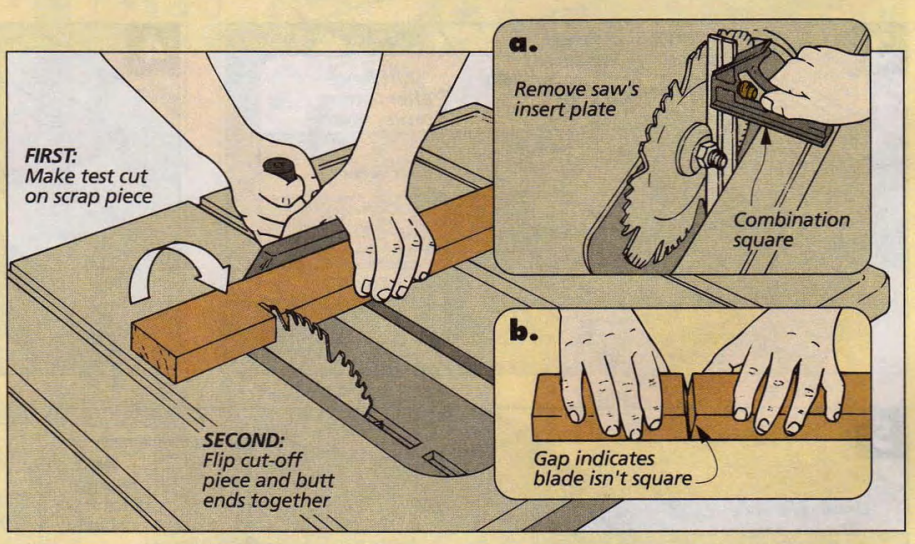

Now it's time for a *dynamic* test of the setup. In other words, I test the squareness of the blade by actually turning the saw on and making a cut.

To do this, make a crosscut on a piece of scrap, see drawing. Then flip the cut-off piece over and butt the ends together, see detail 'b'. If there's any gap where the two ends meet, the saw blade isn't square yet and needs to be readjusted.

Miter Gauge Setup Jig

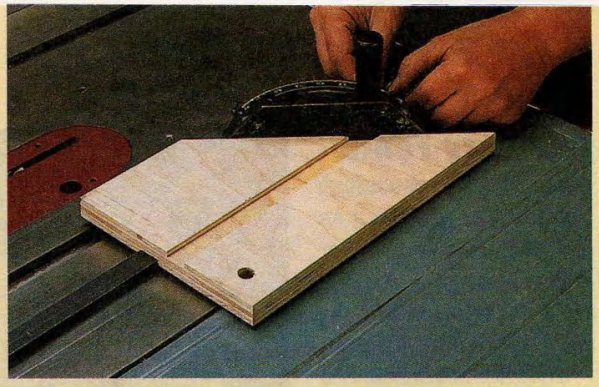

I used to spend quite a bit of time adjusting the miter gauge and testing the setup. Now, I have a simple jig that allows me to quickly and accurately set the miter gauge to both 90° and 45°, see photo above right.

To make the set-up jig, all you need is a scrap piece of plywood. (Mine was 8" x 12".) The first thing to do with this piece is to rip both sides so they're parallel.

Next, cut one end of the jig at 90°. And cut the other end at 45°. These cuts need to be accurate, so take your time. After all, if they're off, even slightly, then your miter gauge will always be off, and the jig won't be of much help.

When the ends are cut, all that's left is to cut two grooves sized to hold the bar of your miter gauge. (I made mine 1/4" deep.) Cut one groove on each face, offsetting them so as not to create a weak point in the jig. I cut two grooves so that you can set the jig to a 45° angle in either direction. (To set the jig to 90°, simply use the square end.)

Supporting a Miter Cut

Even if a setup is perfect, you can still end up with an inaccurate crosscut. That's because pieces have a tendency to shift as they're pushed passed the blade. This is especially true when cutting miters. But there are a couple precautions you can take to prevent this.

First, I always like to work with an auxiliary fence, see drawing below and fence on page 26.

Then to help secure the piece, attach adhesive-backed sandpaper to the fence to "grab" the piece.

I also secure the workpiece with a stop block, see detail 'a' below. For the first miter, I use the square end of the block.

For the second miter, I flip the block around. This end is mitered to 45°, so it contacts the entire end of the piece and protects the tip of the miter. Plus, I add a notch for sawdust relief.

Loose Miter Bar

It's surprising how much side-to-side play a miter gauge can have. And of course, a loose fit can affect the accuracy of the setup.

To solve this problem, I widen the bar with a punch, see drawing below. The punch creates tiny dimples with raised areas, see detail. Note: If the miter gauge bar fits too snug, simply file the dimples down a bit.

Quick Tip

To avoid tearout, don't pull a board back along the side of the saw teeth after making a crosscut. Instead, slide the workpiece away from the blade. Then pull the miter gauge and the board back.

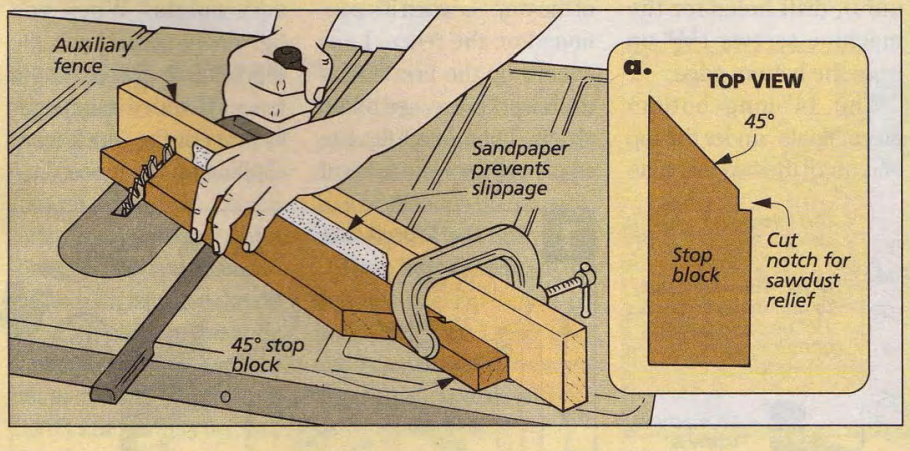

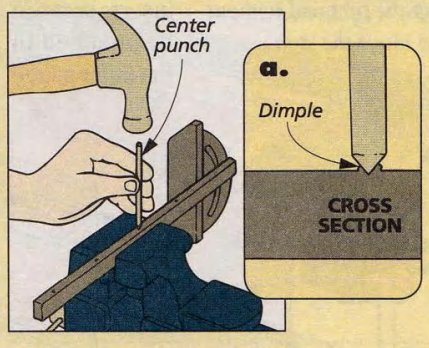

Cut Alignment

When crosscutting a piece, it's not always easy to align a pencil mark with the saw blade. But there's really a simple solution.

To increase the accuracy, make a scratch on the top of the table saw that corresponds to the edge of the blade, see Fig. 1.

Now, simply position the pencil mark drawn on the piece over the scratch line on the saw, see Fig. 2.

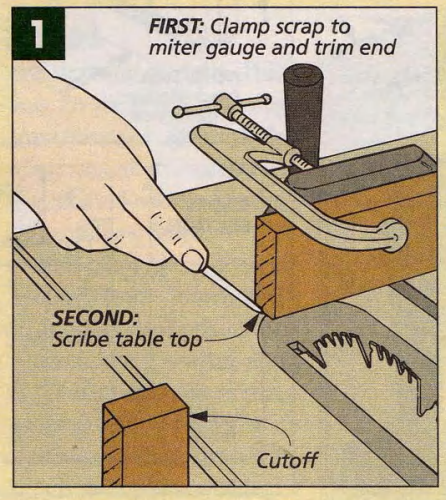

Auxiliary Fence

Whenever I'm crosscutting, I almost always attach an auxiliary fence to my miter gauge, see photo. A fence adds extra support, especially with short pieces.

My fence is adjustable. It can slide side-to-side so the piece is always fully supported by the fence — even with angled cuts. Plus, the front face on the fence can be replaced easily when it gets "chewed up."

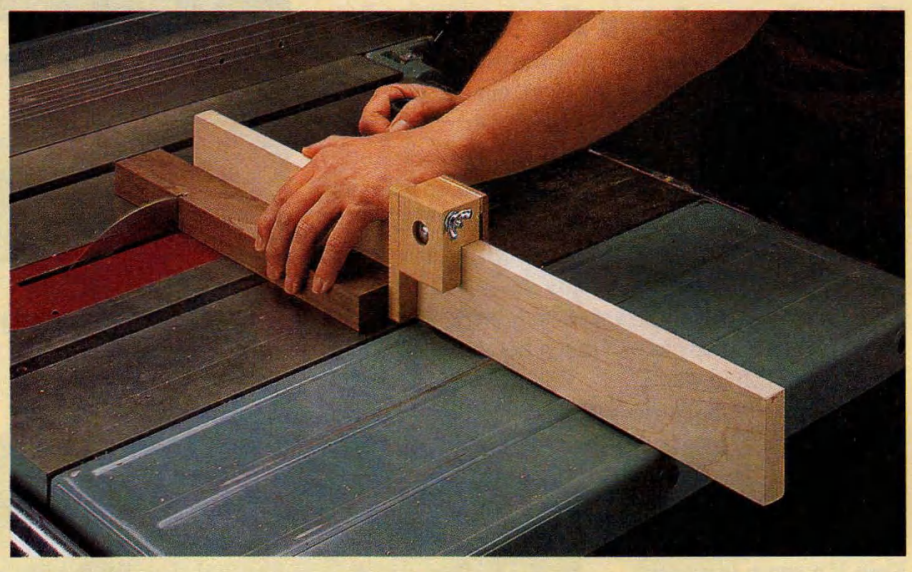

FENCE. The fence is made up of three pieces: two permanent, interlocking pieces and a replaceable front face, see drawing below.

The permanent pieces are $3/4$"-thick and have interlocking rabbets. (I cut both from one extra-long blank.) The top piece is 6"-long and has a couple of threaded inserts so it can be attached to the miter gauge with machine screws, see detail 'a'. By sanding the top piece $1/32$" thinner than the bottom, it will "pinch" the bottom in place.

▲ *A flip-up stop allows you to square up the first end without having to move the stop.*

Note: This fence works easily on a miter gauge with a slotted face. But if yours doesn't have slots (like ours), drill holes for the machine screws $1\frac{1}{2}$" up from the bottom edge.

The 14"-long bottom piece "floats" under the top one (until the two machine screws are tightened). And it's screwed to a replaceable 3"-tall front face.

STOP BLOCK. I also added a stop block to my fence see Fig. 1. It allows me to cut several workpieces all to the exact same length.

The stop also flips up out of the way. So when it's positioned on the fence, I can square up the first end of each workpiece, see photo at left. Then I can flip the stop block back down to cut each piece to final length.

The actual stop is bolted to a clamping mechanism that attaches to the fence, see Figs. 1 and 1a.

This clamping mechanism is an L-shaped block bolted to a piece of hardboard that has two "pressure points." When you tighten the plastic knob, the mechanism clamps to the fence. (I added sandpaper to prevent the block from slipping on the fence.)

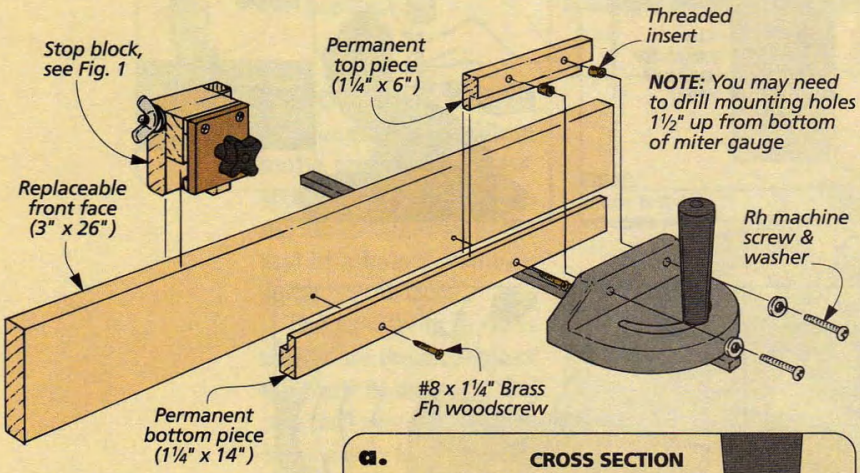

NOTE: *Cut ⅜" x ½" rabbet on long blank. Then cut top and bottom pieces to lenghth.*

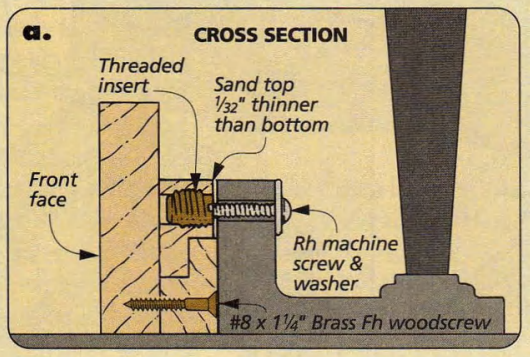

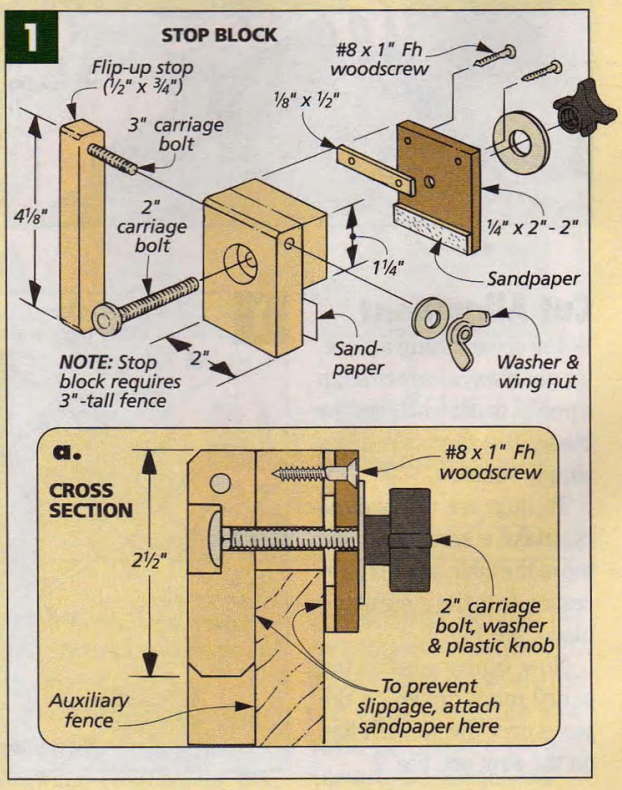

Crosscut Sled

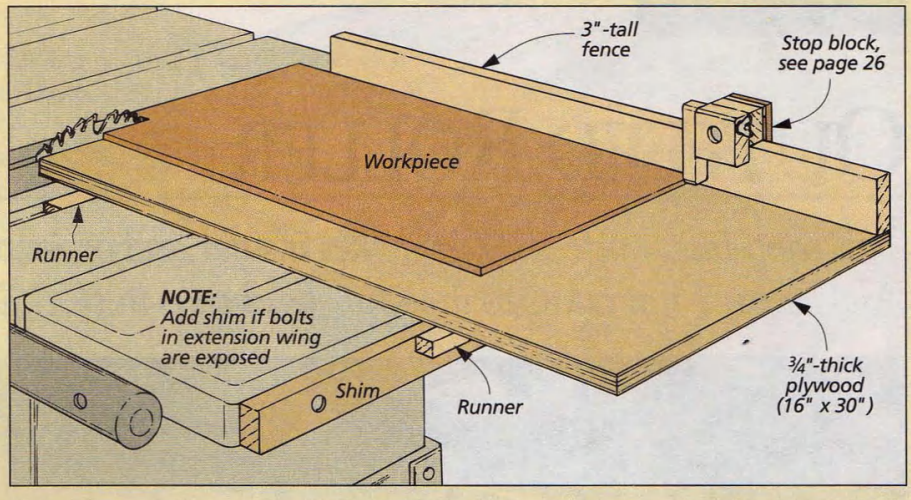

To crosscut large panels on the table saw, I use a simple crosscut sled, see drawing at right. It features a hardwood fence and the same stop block used in the miter gauge fence shown at left.

To build the jig I start by making a hardwood runner. Size the runner so it slides smoothly in the miter gauge slot in the table saw. (Apply a little wax for better sliding action.)

Now cut a piece of ¾" plywood to the size you want. (My piece started out 16½" x 30".) Place the runner in the slot and position the panel on top of the runner so the right end of the panel extends about ½" beyond the blade.

To attach the runner, temporarily tack the panel to the runner with wire brads. Then flip it over and screw the runner in place.

Now to help keep the jig aligned, add a second runner that rides against the extension wing.

Note: If your saw has exposed bolts on the extension wings, add a wood shim to the extension wing, counterboring to recess the bolt heads, see drawing.

Return the assembly to the saw and push the panel through the blade to cut off the right end. This way, the end of the sled is exactly on the path of the blade.

For the fence, I used a 3" tall piece of ¾"-thick hardwood. This way, I could use the same stop block as on the auxiliary miter fence, see page 26.

To add the fence, crank the blade to its full height. Then use a large framing square to position the fence and screw it in place. Finally, add the stop block. To see if everything is square, make some trial cuts on a wide board.

Quick Tip

To micro-adjust the angle of the miter gauge, try shimming the fence with a playing card.

Squaring a Large Panel

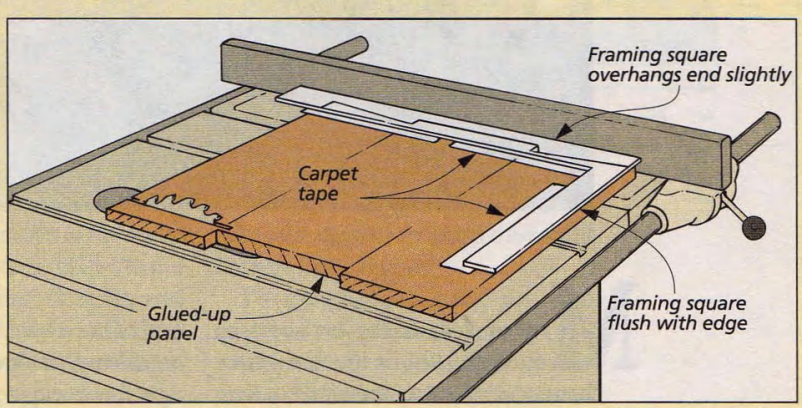

If you need to square up a large glued-up panel but don't have a crosscut sled, you can make do in a pinch with a framing square and some carpet tape.

The trick is to use the rip fence. Of course, the ends of the panel are too uneven just to run the panel along the fence. But you can "fool" the fence. Simply carpet tape the framing square flush with the panel's edge so it overhangs the uneven end slightly, see drawing.

Then butt the square up against the rip fence to make the cut. Once one end is squared up, remove the framing square and cut the opposite end.

Crosscutting Long Pieces

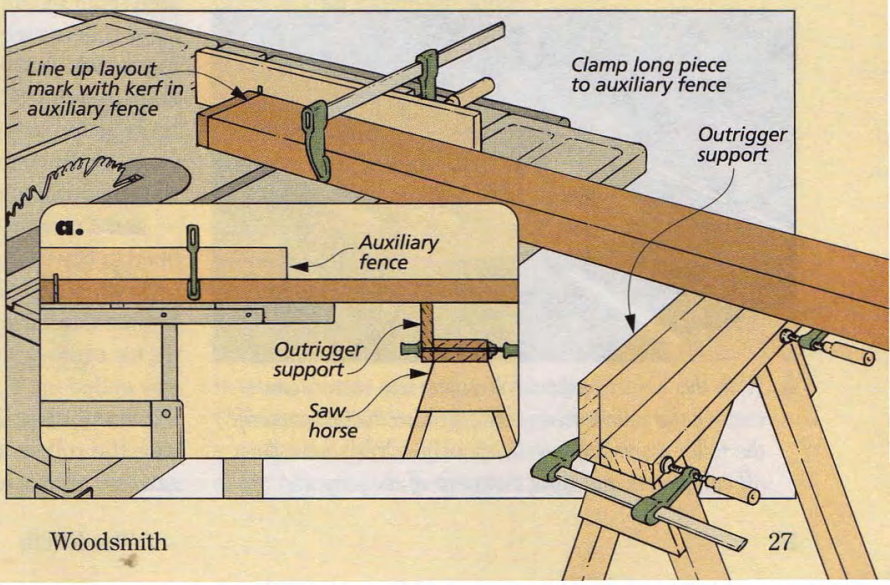

Crosscutting long pieces on the table saw is a hassle. For one thing, it's hard to keep the workpiece tight against the miter gauge. Plus, supporting the far end of the workpiece requires a lot of downward pressure.

To overcome these problems, I need a little extra help. For instance, I still use an auxiliary fence to support the piece. But I clamp the workpiece to the fence, see drawing at right. This way, the piece can't tilt away from the fence. Also, to help align my cutoff mark with the blade, I use the kerf in the auxiliary fence.

The other thing I do is set up a simple "outrigger" to support the ends of the pieces, see drawing and detail 'a' at right. To do this, I clamp a long board to a saw horse so it matches the height of my saw's table.

OUTFEED ROLLER

This shop-built outfeed roller makes it safer and easier to rip long pieces. And because it mounts to the saw, it's always in place when you need it.

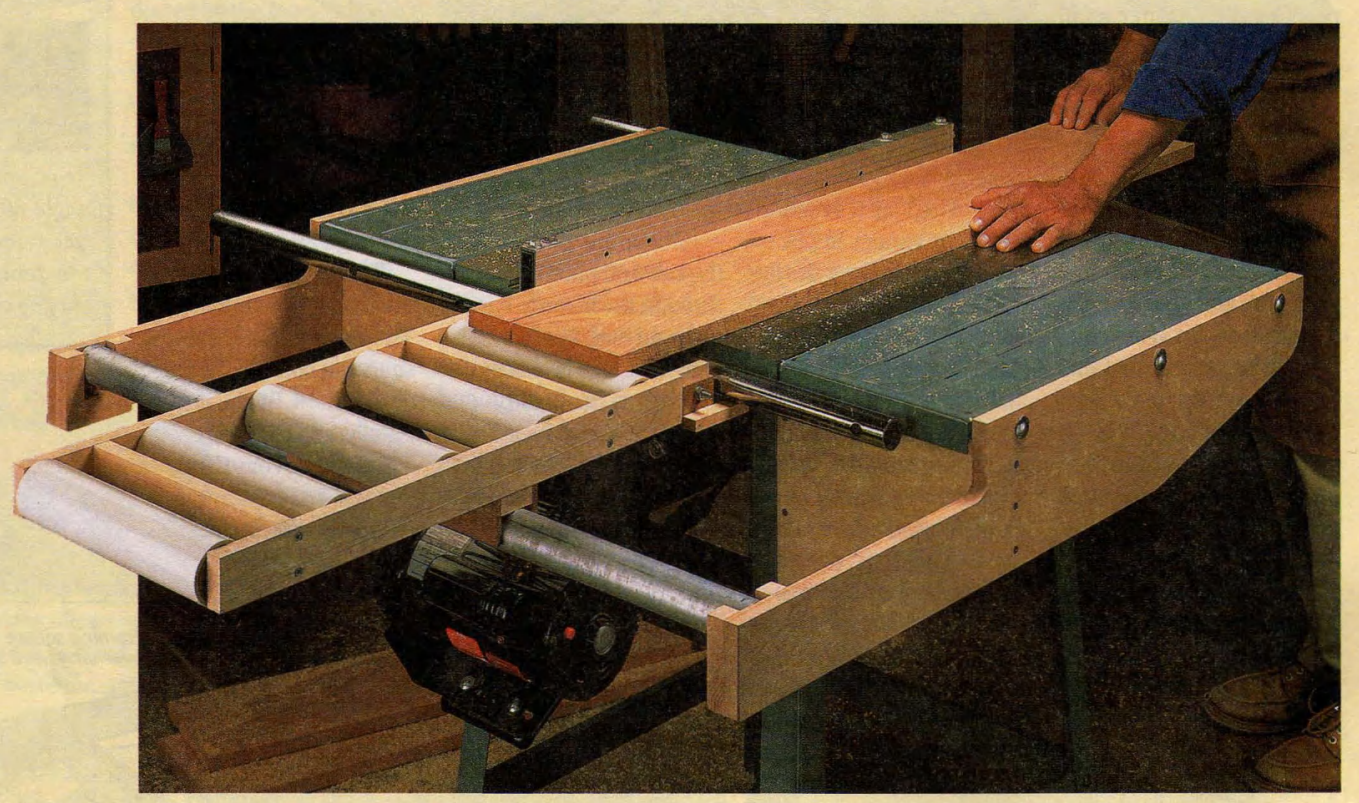

Most table saws are just not deep enough. About the time your hands are close to the blade, a long piece will want to nose dive off the end of the table. And when the cut is complete, you have two pieces to manage: the workpiece and the cutoff.

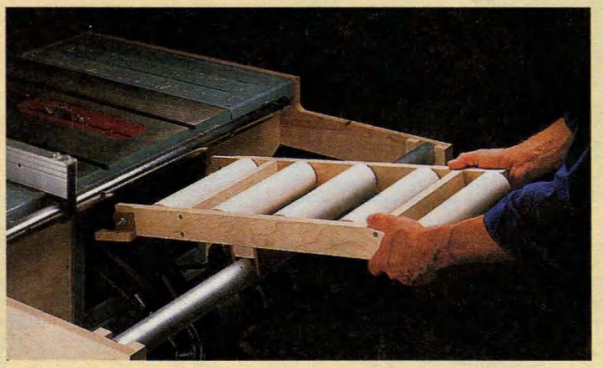

▲ *With this handy outfeed roller, you can reposition or remove the rollers easily. Simply raise the back end of the roller assembly and slide it over. Or lift the rollers off completely and store them out of the way.*

The best solution is to use an outfeed roller behind the saw. However, most rollers you see are floor-standing models. And the problem is a shop floor is rarely level. The rollers can be adjusted to match the height of your saw. But once the saw is moved, the stand will need to be moved too — and it's likely that the rollers will need to be readjusted as well.

So when designing this roller stand, I wanted the rollers to stay flush with the top of the saw no matter where the saw ended up. To do this, I attached the stand directly to the saw. This way, the rollers are always with the saw and always adjusted properly.

But you still want to be able to reposition the rollers. For instance, most of the time I want the rollers right behind the blade, see photo above. But when breaking down a sheet of plywood, I like them closer to the edge of the saw.

To allow this kind of flexibility, the rollers are a separate assembly from the frame they rest on. This way, they can be repositioned easily, see photo at left. Or if you store your saw in a tight space, you can remove the roller assembly and hang it on the wall.

This roller stand is attached to our Delta contractor's saw, but it's designed to work with any contractor's saw. Adapting it to your make and model should be a simple matter of repositioning a few screws.

Arms

To make the roller stand, the first thing to do is build the arms. These pieces are attached permanently to the extension wings on the table saw, see drawing at right. And they support the roller assembly that's added later.

ARMS. Start by cutting the **arms (A)** to finished size from 3/4"-thick blanks, see drawing at right. (I cut mine 6 1/2" x 42 3/4" out of hard maple.)

Since the fence rails on the saw stick out past the extension wings, the next thing to do is notch out the arm blanks, see details 'b' and 'c'. This notch should allow the arm to fit around the back rail as well as leave enough clearance (at least 1/4") so it isn't in the way of the rip fence.

And while I was at it, I also rounded the sharp corner on the front bottom edge, see drawing and detail 'c'.

CRADLES. Before attaching the arms, I added a U-shaped **cradle (B)** to the inside face of each, see Fig 1. These cradles support a piece of common electrical conduit I picked up at a hardware store. (The roller assembly will actually ride on this conduit.)

The cradles will be easier to make if they're cut from an oversize blank, see Fig. 1a. I started by cutting the notches that hold the conduit. Their widths should match the conduit's outside diameter. (Mine was 1 3/4".)

Next, drill a pilot hole and add a #10 woodscrew inside each notch. (Do this before cutting the pieces to size.) Later, this screw will allow you to easily adjust the height of the conduit.

After gluing the cradles to the arms, the arms are ready to be bolted to the extension wings, see drawing and detail 'a'. But first, I made sure the wings were flush with the surface of the saw's table, see detail 'b'. (This will make it easier to adjust the height of the rollers later on.)

To attach the arms, my saw required a 7/16" carriage bolt (and some washers), see detail 'a'. But again, this will depend on your saw. (You may even need to drill some holes in your extension wings.)

When mounting the arms to the wings, the arms should be flush with the surface of the extension wings, see detail 'b'. But they should also be square to this surface. You can do this by bending the flanges on the wings in or out. Or in the case of cast iron extension wings, you can shim the arms so they're square.

CONDUIT. Now all that's left to do is cut the electrical conduit to fit between the two arms, see Figs. 1 and 1a. (Mine was 40 5/8" long.) It rests on the screw in the cradles. (But don't worry about adjusting its height just yet.)

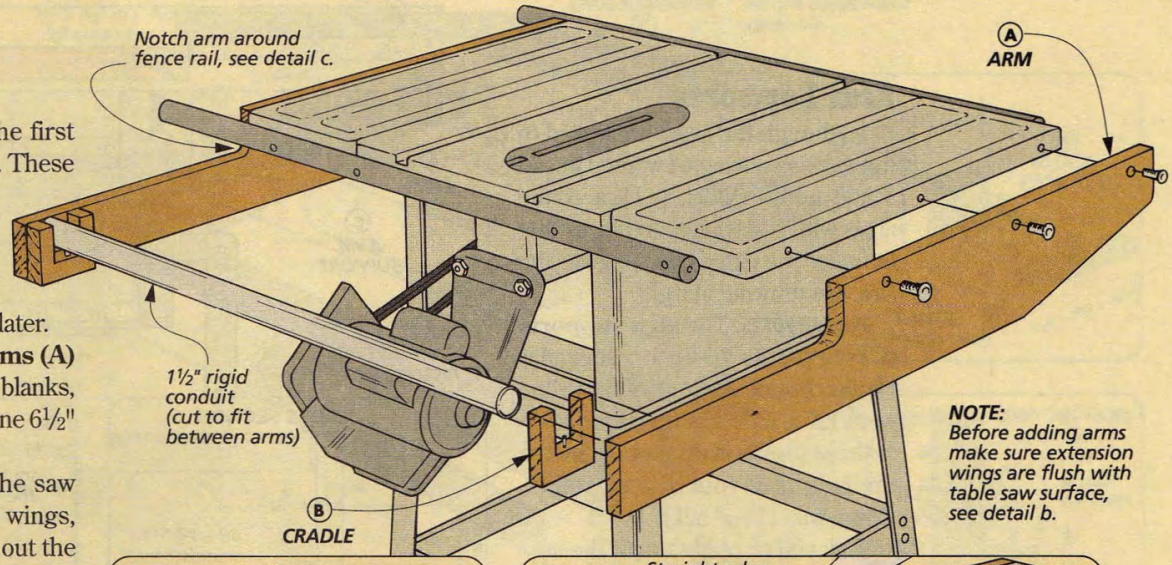

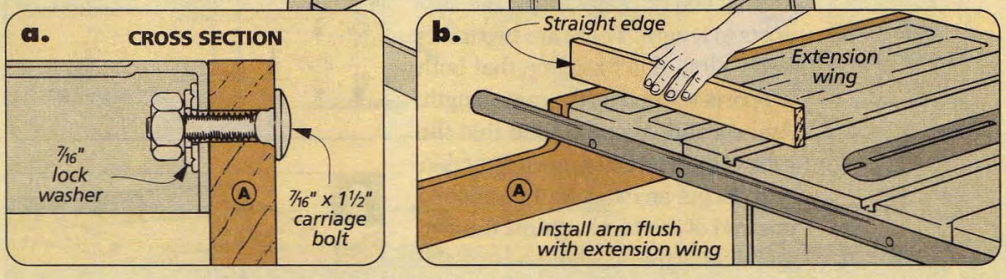

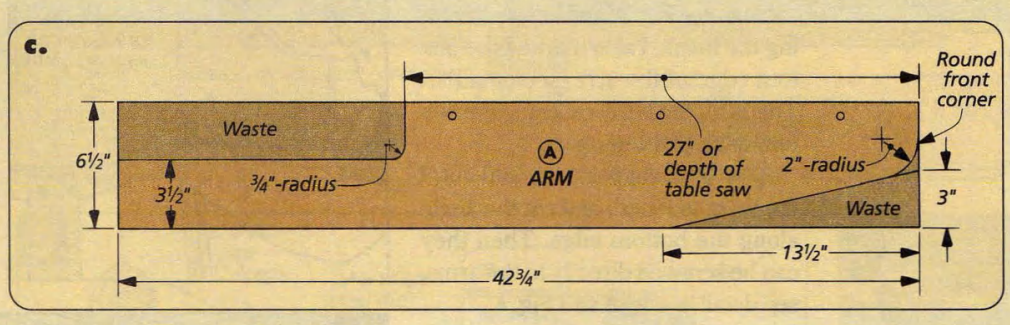

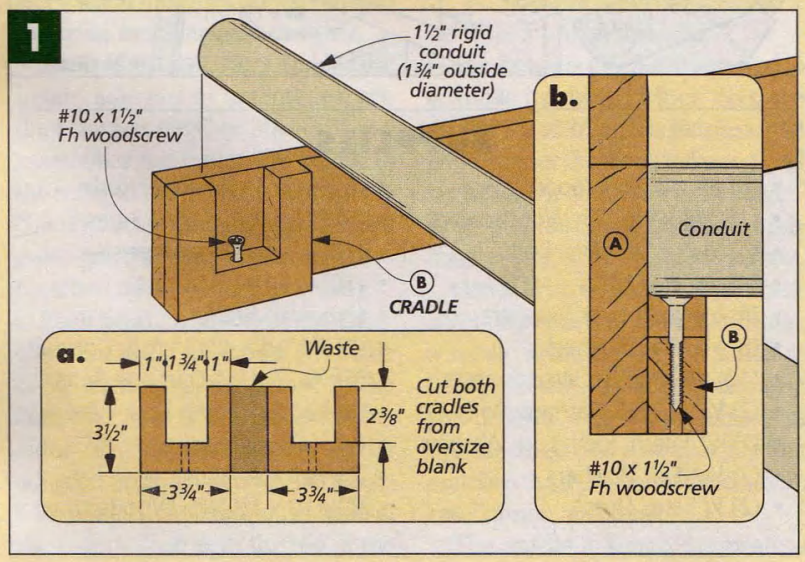

Arm Supports

Even though the arms are bolted to the extension wings, I wanted to add a little more support. So I braced the arms with two triangular pieces that fit under the extension wings of the saw, see drawing at right.

ARM SUPPORTS. The **arm supports (C)** start out as 3/4"-thick rectangular blanks, see detail 'b' at right. (Mine were 12" x 13"). The first thing to do to these blanks is rip them to match the height of your saw's cabinet. (Mine was 11 5/16" tall.)

Now you're ready to cut the supports to length. There are two tricks here. First, don't assume that both supports will end up the same length. And second, keep in mind that the cabinet may not be square to the table.

So to get an exact fit, I positioned one end of the blank against the arm and scribed the opposite end to fit the cabinet, see Fig. 2. And before removing the blank, I also marked the bottom edge of the arm, see detail 'b'. This is for the bevel cut along the bottom edge of the support.

After both supports are laid out, I cut them to length and cut the angle along the bottom edge. Then they can be screwed directly to the arms, see detail 'a' above and Fig. 4.

FLANGES. To attach the supports to the saw's cabinet, you'll need to add a flange to each, see Figs. 3 and 3a. The **flanges (D)** are 2 1/2"-wide pieces cut to match the height of the cabinet.

The flanges are screwed to the arm supports (C) but bolted to the table saw, see Figs. 3a and 4. And to do this, you'll probably need to drill some holes in the table saw's cabinet.

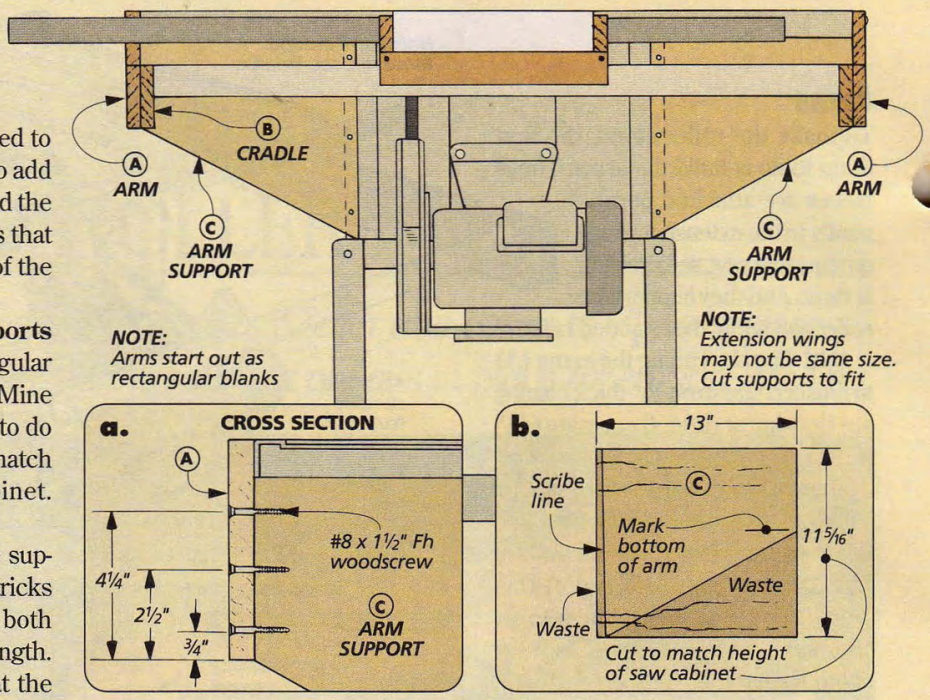

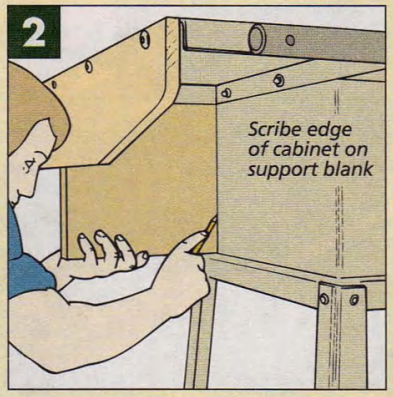

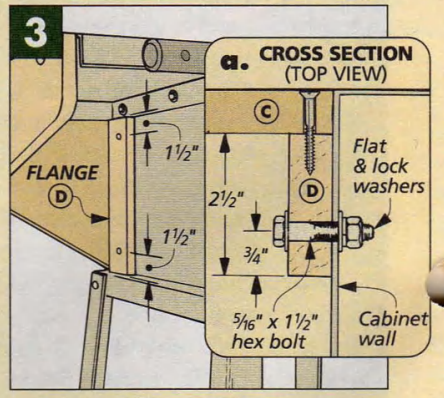

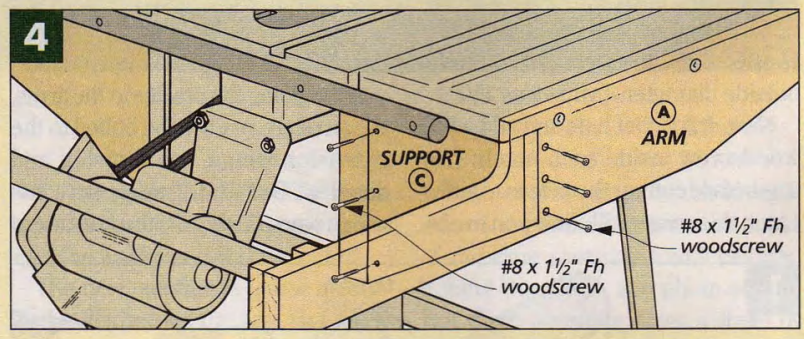

MATERIALS

A	Arms (2)	3/4 x 6 1/2 - 42 3/4
B	Cradles (2)	3/4 x 3 1/2 - 3 3/4
C	Arm Supports (2)	3/4 x 12 - 13 rgh.
D	Flanges (2)	3/4 x 2 1/2 - 11 5/16
E	Roller Sides (2)	3/4 x 2 3/8 - 26 1/2
F	Cross Members (2)	3/4 x 2 3/8 - 11 1/4
G	Hgt. Adj. Flanges (2)	1/4 x 2 - 2
H	Hgt. Adj. Blocks (2)	3/4 x 1/2 - 3 1/2
I	Saddle Sides (2)	1/4 hdbd. x 1 7/8 - 12 3/4
J	Saddle Spacer (1)	3/4 x 1 3/4 - 12 3/4

Note: Sizes may vary depending on your table saw.

SUPPLIES

- (8) #8 x 2" Fh Woodscrews
- (16) #8 x 1 1/2" Fh Woodscrews
- (4) 5/16" x 1 1/2" Hex Bolts
- (4) 5/16" Hex Nuts
- (4) 5/16" Split Lock Washers
- (8) 5/16" Flat Washers
- (10) #6 x 3/4" Fh Woodscrews
- (2) 1/4" x 1 1/4" Carriage Bolts
- (2) 1/4" Intern. Tooth Lock Washers
- (2) 1/4" Flat Washers
- (2) 1/4" Hex Nuts
- (5) 3/8" x 11 7/8" Steel Rods
- (5) 2" i.d. x 11" PVC Pipes
- (10) 2"-dia. Toy Wheels
- (10) 3/8" Flat Washers
- (20) Wire Brads
- (1) 1 1/2"-dia. x 48" rgh. Conduit
- (6) 7/16" x 1 1/2" Carriage Bolts
- (6) 7/16" Ext. Tooth Lock Washers
- (6) 7/16" Flat Washers
- (6) 7/16" Hex Nuts
- (2) #10 x 1 1/2" Fh Woodscrews

Roller Assembly

Now it's time to add the roller assembly. This consists of five PVC rollers and a simple frame, see drawing.

ROLLERS. Each of the rollers is made with 2"-dia. PVC pipe. Begin by cutting the pipe into five individual 11"-long tubes and sanding the ends smooth, see Fig. 5.

Now the tubes are ready to be plugged to support a 11⅞"-long steel axle rod, see Fig 5. The PVC tubes require 2" hardwood circles. You can make your own with a circle cutter, or do what I did — use toy wheels. The axle hole in these wheels is just the right size for the ⅜"-diameter rod.

Note: To fill any gaps in the fit of the wheels, wrap tape around the wheels before pushing them in flush to the ends of the tubes, see Figs. 5 and 5a. Then pin the wheels with wire brads.

SIDES & CROSS MEMBERS. With the rollers complete, the frame can be built around them. I started with the **sides (E)**, see drawing. After these are cut to size (2⅜" x 26½"), I drilled 7/16"-dia. holes on their inside faces to hold the steel rods, see detail 'c' and Fig. 5a. Then on the *outside* face of each side (E), I cut a ¼" x 2" rabbet on the end closest to the saw, see drawing and detail 'a'. Each rabbet will hold a height adjustment assembly.

Now the **cross members (F)** can be cut to size (2⅜" x 11¼"). These are just long enough to trap the rollers (and two flat washers) between the sides when the sides are screwed to the cross members, see drawing.

HEIGHT ADJUSTMENT. Next, I added the height adjustment assemblies, see drawing and detail 'a' above. These assemblies determine the height of the rollers. And because they simply "hook" under the table saw fence's guide rail, it's easy to slide the rollers back and forth (or remove them).

Each height adjustment assembly starts out as a 2"-tall **flange (G)** made of ¼" hardboard, see detail 'a'. The flange is cut to fit the rabbets in the sides (E). It's slotted so it can be adjusted up and down when it's bolted in place. This allows you to position the rollers flush with the top of the saw. But more on this later.

The flange is glued and screwed to a simple hardwood **block (H)**, see details 'a' and 'b'. This is the piece that hooks under the fence rail, see detail 'c'. Note: On some saws, like Sears' saws, you may need to add an additional spacer block, see photo at right.

SADDLE. With the height adjustment assembly bolted to the roller frame, a saddle assembly can be added to hold the rollers in place, see drawing and detail 'c'. The saddle consists of two **sides (I)** and a **spacer (J)** that matches the diameter of the conduit, see drawing and detail 'c'.

The saddle is simply screwed to the bottom of the frame, see detail 'c'. The trick is determining where to attach it. To find the right position, I set the saddle on the conduit and the rollers on the saddle, see detail 'c'. Then I made sure there was a ¼" gap between the roller assembly and the table saw fence's guide rail and marked the location of the saddle on the bottom of the roller frame. Then the saddle can be screwed in place.

At this point, the outfeed roller is complete. But you'll still need to adjust it flush with the surface of your saw by adjusting the height adjustment assemblies and the screw under the conduit, see detail 'c' above. W

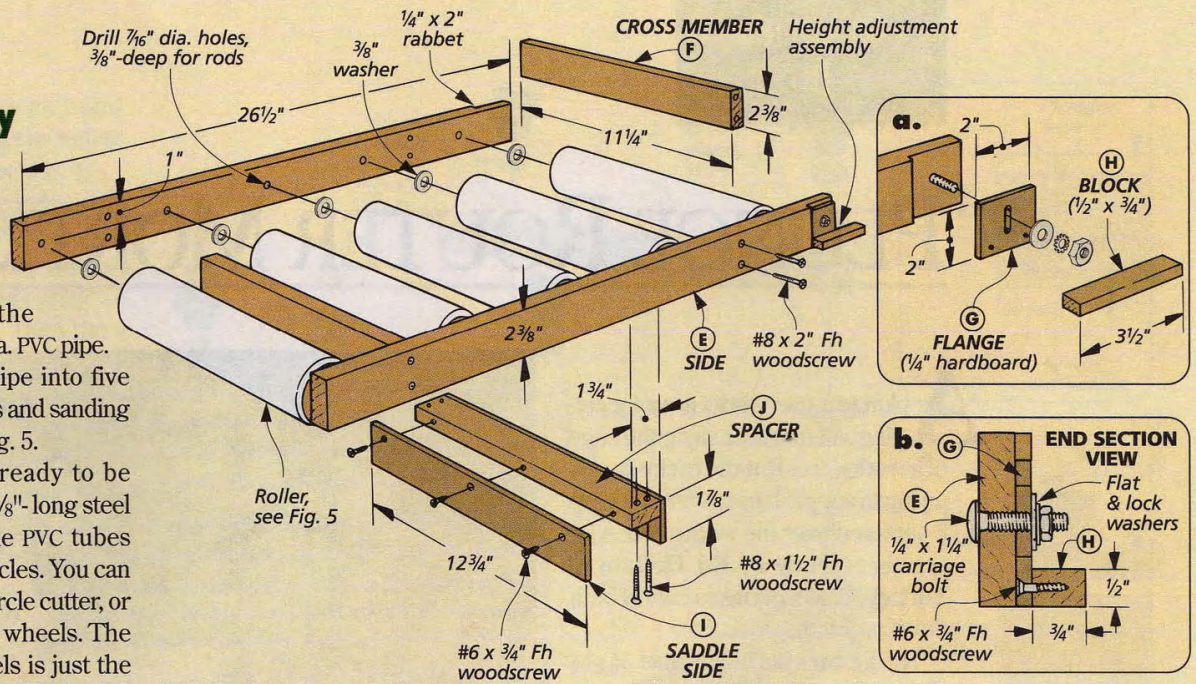

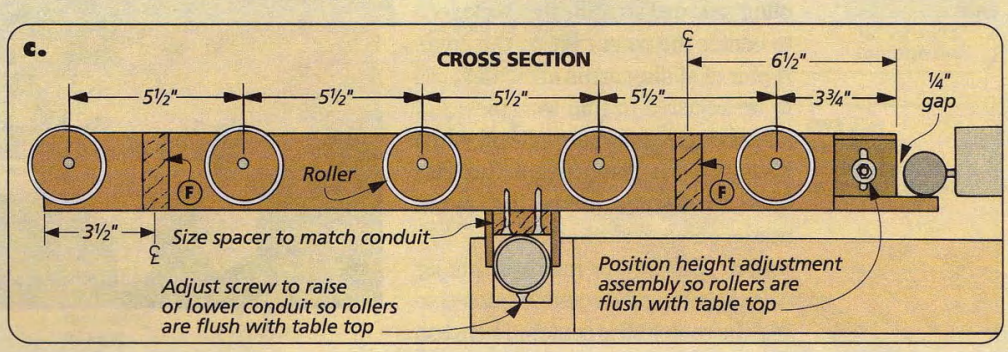

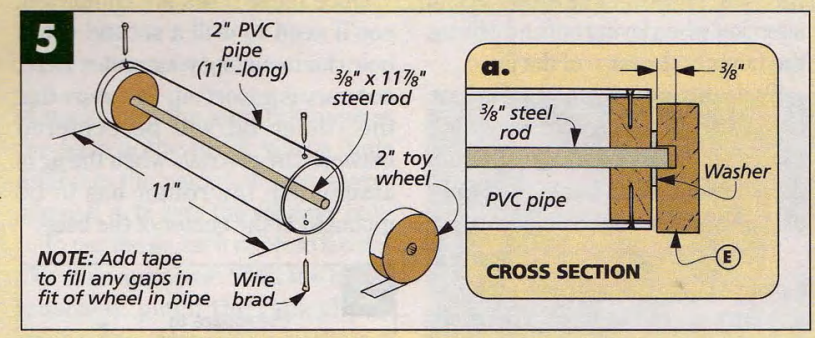

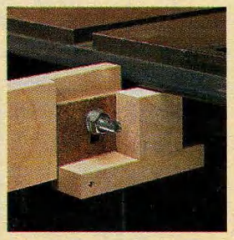

▲ *The shape of some fences, like those on Sears' table saws, may require an additional spacer block on the height adjustment assembly.*

PLUNGE ROUTER MORTISE JIG

A plunge router works great for cutting slot mortises along the edge of a workpiece. But the tricky part is trying to support the router and keep it centered over the workpiece. A jig sent in recently by **Ed Hellam** of Turlock, California takes care of both these problems.

The jig consists of a couple of pivoting rails that straddle the workpiece to center the router bit on the edge. A pair of sliding arms allow the rails to be adjusted to trap workpieces of just about any thickness. And when it's time to rout a mortise, a Plexiglas base allows you to see the layout marks on your workpiece.

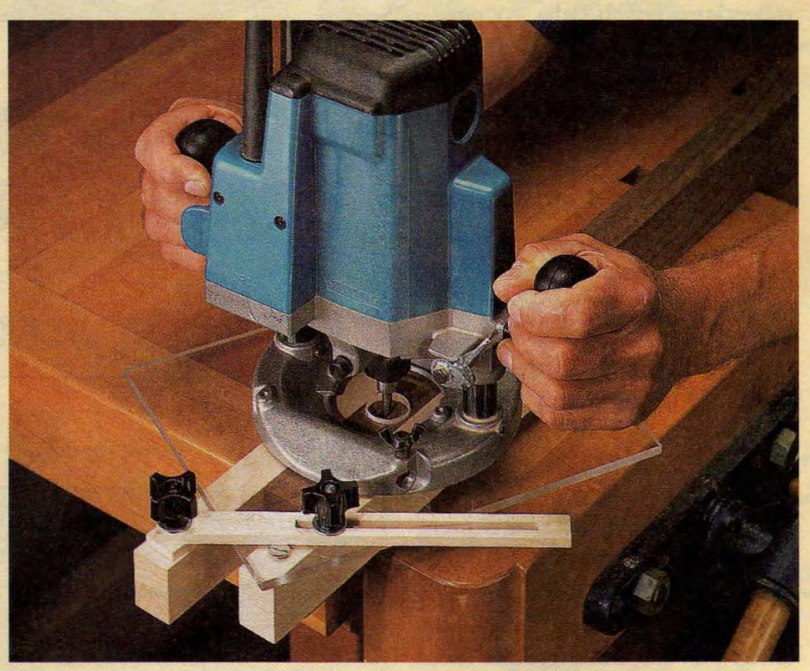

BASE. The key to making this jig work is getting the router mounted so that the router bit is centered between the rails. This requires some careful attention when laying out and drilling the holes in the base of the jig.

To do this, start by cutting the base to size from a piece of 1/4"-thick Plexiglas. Then draw diagonals from corner to corner to locate the center of the base, see Fig. 1.

The next step is to lay out and drill a pair of countersunk holes in opposite corners of the base. These are for attaching the rails and sliding arms later, see Fig. 2. Note: The holes in each pair are countersunk from opposite sides of the base, see Fig. 2a.

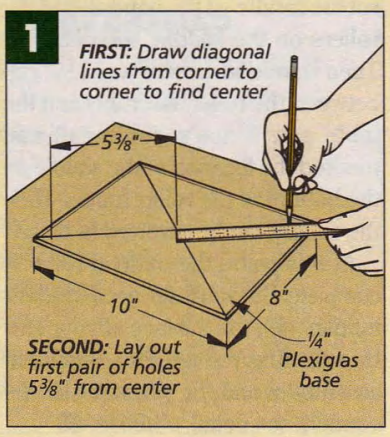

Once these holes are completed, you'll need to drill a second set of holes for mounting your router. Here, accuracy is important. To ensure that the router bit will be centered between the two rails when the jig is assembled, the router has to be mounted in the center of the base.

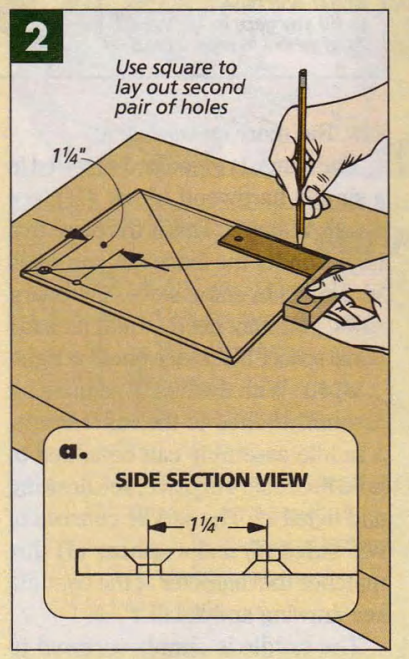

One way to do this is to mount a V-groove bit in your router and use the point of the bit to zero in on the "crosshairs" right in the center of the base, see Fig. 3.

When you have the router in position, trace the outline of the router base onto the jig base. Then without

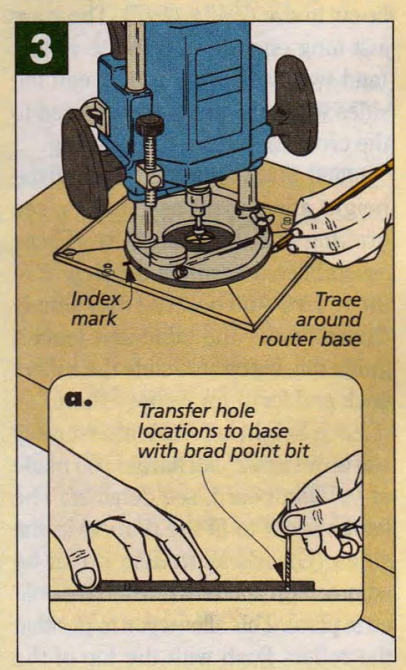

moving the router, draw an index mark on the base of the jig as well as the base of the router, see Fig. 3.

To finish laying out the holes, simply remove the base plate from your router and set it on the Plexiglas base of the jig inside the traced outline so the index marks line up. Then use a brad point bit to transfer the mounting screw hole locations, see Fig. 3a.

RAILS & SLIDING ARMS. With the base complete, the rest of the jig is really pretty straightforward. The two guide rails are nothing more than a couple pieces of 1½"-thick stock with a counterbored hole drilled at each end, see detail 'a'. These holes will be used for attaching the rails to the base and to the sliding arms.

Making the two sliding arms is a little more involved. Each arm has a slot in the middle to allow it slide in and out. But instead of trying to cut a long slot inside narrow workpiece, the arms are actually made up of four individual pieces, see detail 'c'. Then a hole is drilled in the end of each arm for a carriage bolt that attaches the arm to the rail, see detail 'b'.

ASSEMBLY. Assembling the jig is just a matter of installing the machine screws, carriage bolts, and plastic knobs that connect the pieces, see drawing above and details 'a' and 'b'. First, the rails are attached to the base with machine screws, washers, and nylon lock nuts, see detail 'a'. Then, the sliding arms are attached to the base with machine screws, washers and plastic knobs.

The last assembly step is to connect the free ends of the rails and sliding arms with carriage bolts and knobs. But before this can be done, you'll need to cut a couple of 1"-square spacers to fit between each arm and rail, see detail 'b'. These are made out of stock that is the same thickness as the base of the jig. A ¼"-dia. hole drilled in the center of each spacer allows it to fit over the carriage bolt.

To use the jig, set it down so it straddles the workpiece. With the knobs loosened, pinch the rails closed against the sides of the workpiece and tighten down the plastic knobs, see photos at right.

The jig automatically centers the router on the edge of the workpiece. All you have to do is plunge the bit down and rout your mortise. W

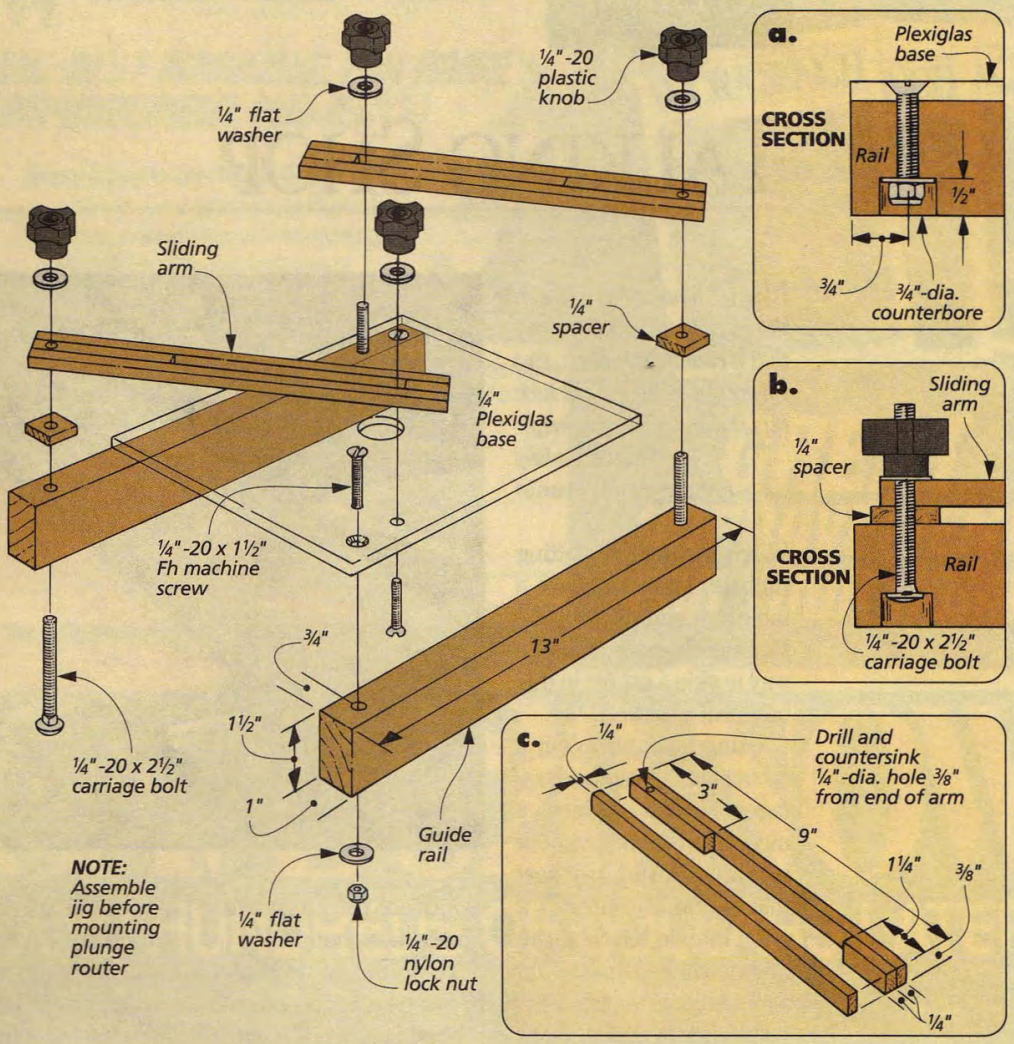

◄ *To use the jig, first clamp the workpiece securely in a vise. Then unlock the knobs that secure the sliding arms.*

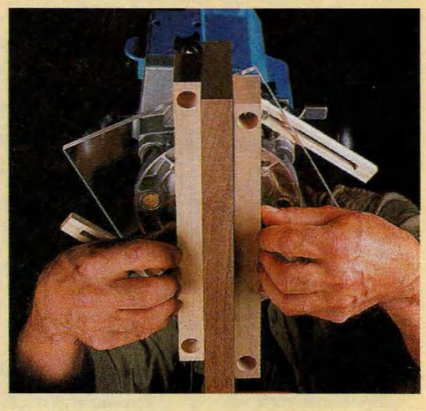

◄ *Slide the rails of the jig up against the workpiece. Then tighten down the knobs before routing the mortise.*

FEATURE YOUR JIG

If you've built an *original* woodworking jig and would like to see it featured on this page, send your idea to *Woodsmith* Magazine, Reader's Jig, 2200 Grand Ave., Des Moines, IA 50312.

If we publish your jig, we will send you $100 and a full set of *Woodsmith* back issues, with binders (a $500 value). Include a sketch (or photo), explain how it's used, and please include a daytime phone number in case we need to contact you about your jig.

TALKING SHOP

When I bought my jointer, the catalog description said that it could cut rabbets. But I have yet to figure out how this is done. Can you help?
Mike Krovisky
Beaver, Pennsylvania

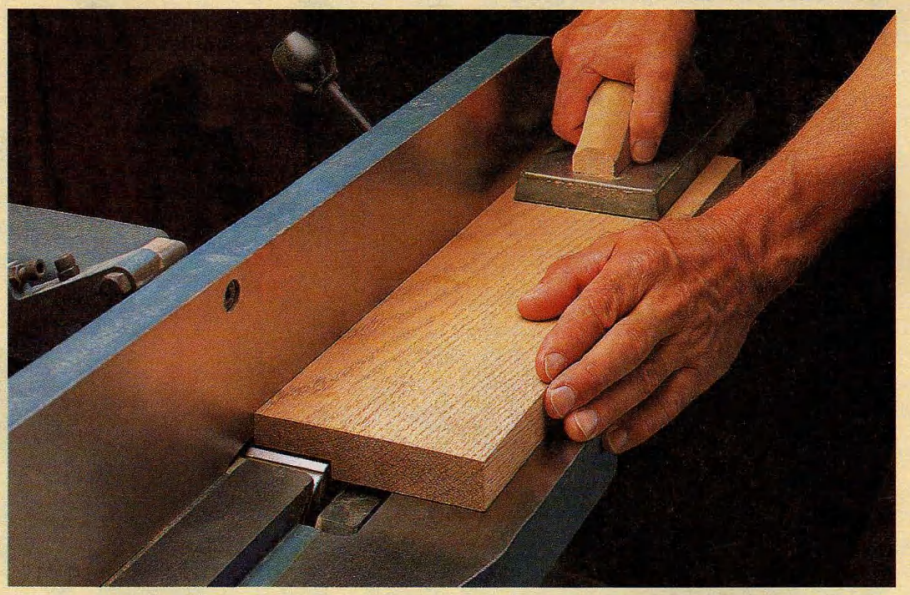

When it comes to cutting rabbets, I generally use a table saw and dado blade. But there's more than one way to skin a cat (or in this case, cut a rabbet).

Using a jointer to cut a rabbet has two main advantages. First, it produces a nice, clean rabbet without leaving behind any saw marks. So a jointer is a good choice anytime the rabbet will be exposed (in a molding, for example).

Another benefit of using a jointer is that you can cut a wide rabbet. In fact, the width of a rabbet you can make on a jointer is limited only by the length of the jointer knives.

PROCEDURE. Using a jointer to cut a rabbet is really a simple procedure. All it involves is moving the fence of the jointer toward the end of the cutterhead so that only a portion of the workpiece passes over the knives, see photo.

To do this, your jointer has to be equipped with a rabbeting arm and a notch along the edge of the outfeed table. The arm supports the unrabbeted portion of the board, see Fig. 1. And the notch provides clearance for the shoulder of the rabbet, see Fig. 2.

To set the width of the rabbet, measure from the fence to the end of one of the jointer knives.

MULTIPLE PASSES. Cutting a rabbet safely requires making several passes. Start by setting the jointer to take a shallow cut (no more than $1/16$"). Then lower the infeed table another $1/16$" or so after each pass until you reach the required depth of the rabbet.

Shop Note: The maximum depth of any rabbet you can cut on a jointer is limited by the depth of the notch on the outfeed table — usually about $1/2$".

SAFETY CONCERNS. If there is one thing that prevents me from using a jointer for cutting rabbets more often, it's the fact that most jointers require you to remove the guard assembly for this procedure.

Depending on your jointer, this can be a real hassle. But more importantly, working without the guard makes me a little nervous about safety.

To keep my hands away from the knives, I always use push blocks when feeding a board through the jointer face down. Or, if I'm cutting a narrow rabbet, I'll stand the board on edge, see Fig. 3. W

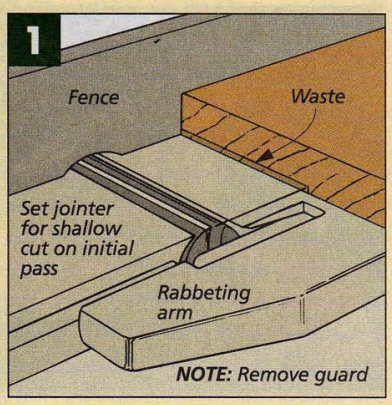

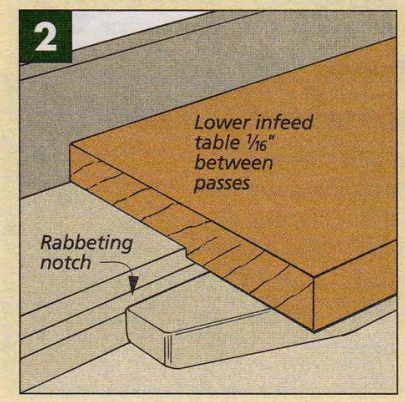

SOURCES

Woodsmith Project Supplies offers hardware kits and supplies for some of the projects shown in this issue. Supplies for these projects are also available at your local hardware store or through the mail order sources at right.

COFFEE TABLE

To build the coffee table on page 6, all you need for hardware is a few screws. But if you plan on including a glass panel, it's a good idea to order it before you begin building the table.

We bought our glass panel (24" x 32") from a local glass shop. It was 1/4"-thick glass with a 1"-wide beveled edge.

SOFA TABLE. A while back we featured a sofa table that matches the style of the coffee table. In fact, you can see it in the background in the photo on page 13.

This issue (No. 104) is still available from *Woodsmith Project Supplies*.

Woodsmith Issue No. 104
WS104 ..... $4.99

JEWELRY BOX

Building the jewelry box on page 14 requires a few pieces of hardware, plus some other items that I'll mention in a bit.

For hardware, we used two 10mm barrel hinges and a small mortised lid stay. (You'll need a 10mm drill bit to mount the hinges, see sources at right.) *Woodsmith Project Supplies* is currently offering a kit that includes all the hardware you need for the jewelry box.

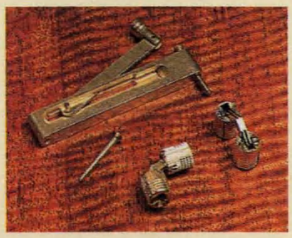

Jewelry Box Hardware
7112-100 ..... $14.95

Note: This or similar hardware is also available from the sources at right.

Besides the hardware, you'll also need three pieces of veneer (11" x 14"), see the sources at right. Plus, you'll need some fabric and posterboard to line the inside of the box and tray. And some leather to cover the bottom. We found these items locally.

HUMIDOR

The jewelry box can also be built as a humidor, see page 19. But you'll need some additional items.

Along with hinges and a lid stay, you'll also need a hygrometer and humidifier to check and regulate the moisture inside.

Currently, *Woodsmith Project Supplies* is offering a kit for the humidor.

Cigar Humidor Hardware
7112-125 ..... $51.95

Note: This or similar hardware is also available from the sources at right.

Besides using special hardware, we also lined our humidor with Spanish cedar. We used two 10" x 13" pieces of veneer and 1.9 square feet of solid wood (3/8" thick). This is available from the sources at right.

OUTFEED ROLLER

The table saw outfeed roller requires quite a bit of hardware. (For a complete list of the supplies you'll need, see the box on page 30.) Fortunately, most of it is readily available at a hardware store or home center.

However, since PVC pipe often has to be purchased in long lengths and because the 2"-dia. toy wheels may not be readily available, *Woodsmith Project Supplies* is offering a hardware kit *for the rollers only*. This kit includes the following precut items:

(5) 2" x 11" PVC Pipes
(10) 2"-dia. Toy Wheels
(5) 3/8" x 11 7/8" Steel Rods
(10) 3/8" Flat Washers
(20) #17 Wire Brads

Outfeed Roller Hardware
7112-200 ..... $28.95

MAIL ORDER SOURCES

Similar project supplies and hardware may be ordered from the following companies:

Certainly Wood
716-655-0206
Jewelry Box Veneer
Spanish Cedar

Constantine's
800-223-8087
Jewelry Box
Hardware & Veneer,
10mm Drill Bit

The Hardwood Store
800-849-9174
Jewelry Box Veneer
Spanish Cedar

Woodcraft
800-225-1153
Jewelry Box
Hardware & Veneer,
10mm Drill Bit,
Humidor Hardware,
Spanish Cedar

Woodsmith Store
800-835-5084
Jewelry Box Hardware,
10mm Drill Bit,
Humidor Hardware,
Spanish Cedar,
Roller Hardware

Woodworkers' Store
800-279-4441
Jewelry Box
Hardware & Veneer,
10mm Drill Bit,
Humidor Hardware,
Spanish Cedar,
2" Toy Wheels

WOODSMITH PROJECT SUPPLIES

If you would like to order project supplies or books from *Woodsmith Project Supplies*, please use our Toll Free order line, see below. It's open Monday through Friday, from 8 AM to 5 PM Central Time.

Before calling, please have your VISA, MasterCard, or Discover Card ready.

If you would like to mail your order in, call the number below for more information concerning shipping charges as well as any applicable sales tax.

1-800-444-7527

Note: Prices subject to change after October 1997

WoodNet™ NOW ON THE WEB!

- Over 70 Woodworking Tips Online
- Project Plans You Can Download
- WoodNet Forum — Woodworkers' Q & A
- Home Improvement Forum
- Power Tool Reviews
- Links to Other Woodworking Sites
- Online Back Issue Index

Point your browser to:

http://www.augusthome.com

Select "Woodworking" from the Welcome Page menu.

FINAL DETAILS

▲ **Coffee Table.** *This Craftsman-inspired coffee table features a beveled glass top, a series of narrow spindles, and a wide shelf. Detailed plans begin on page 6.*

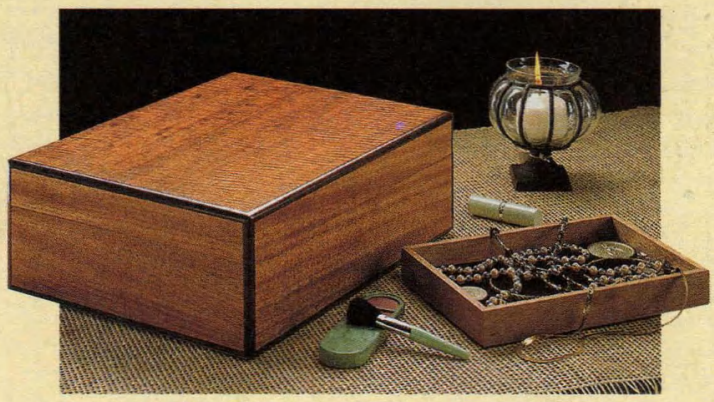

▲ **Jewelry Box.** *The walnut edging provides a striking contrast to the figured-mahogany lid on this unique jewelry box. Step-by-step instructions begin on page 14.*

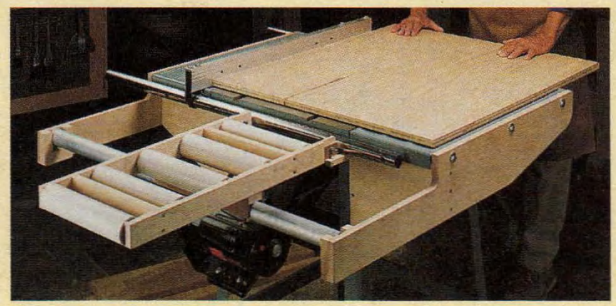

▲ **Outfeed Roller.** *Our shop-built outfeed roller attaches to your table saw, so it's always in place when needed. Complete plans begin on page 28.*